Assembly Instructions

Caution : You must read this before you proceed

Loveseat

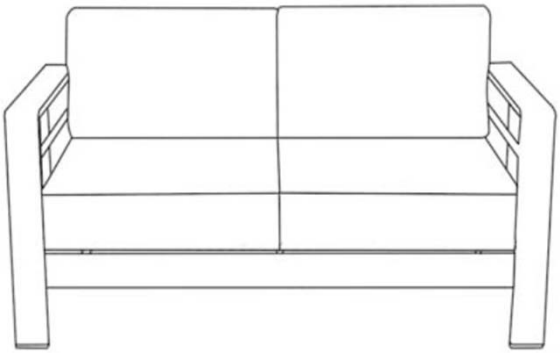

Parts List

Label	Picture	Description	QTY
A		Left Side Panel	1
B		Right Side Panel	1
C	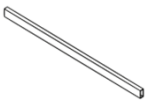	Back Support Bar	1
D	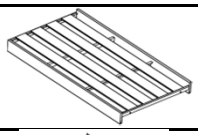	Seat (Labelled with face and bottom)	1
E	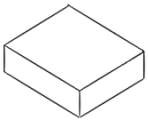	Seat Cushion	2
F	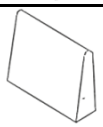	Back Cushion	2

Hardware

Label	Picture	Description	QTY
①		Bolt (M6*20MM)	5
②	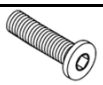	Bolt (M6*25MM)	7
③		Allen Key	1

Assembly Preparation

Before Beginning Assembly:

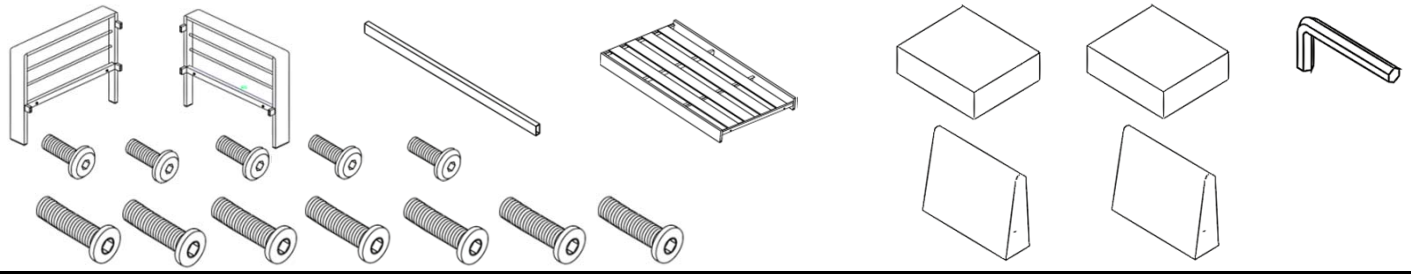

- Read instructions, cover to cover-
- Have 2 adults on hand for assembly-
- Do not assemble on flooring or carpet-
- Assemble on a clean non-marring surface (packing foam)-
- Save all packaging until finished-

Assembly Steps

Step 1

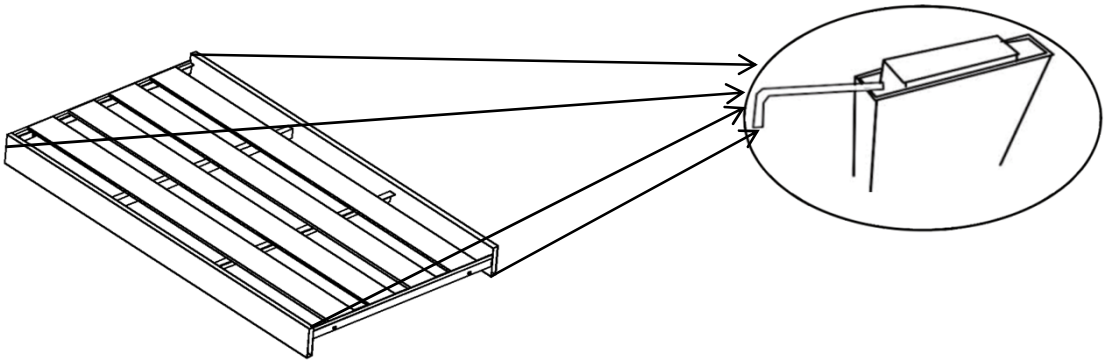

As shown above, use an inner hexagon wrench (3) to remove the plastic plug (to prevent aluminum deformation) from the four ends of the seat (D).
If necessary, please keep the plastic plug for repacking.

Step 2

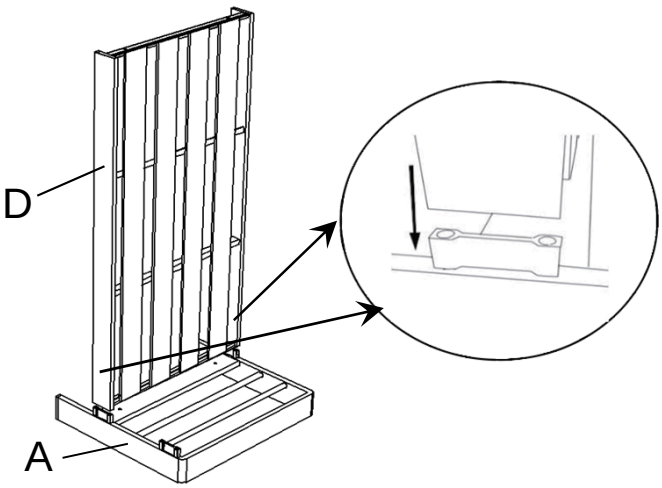

Open the carton and place all the parts on a clean,non-marring surface.
Insert the Seat(D) into the Left Side Panel(A),shown as the picture.
If you found the seat(D) didn't line up with the Side panel(A),please reverse the seat(D) to match up the mounting position.

Step 3

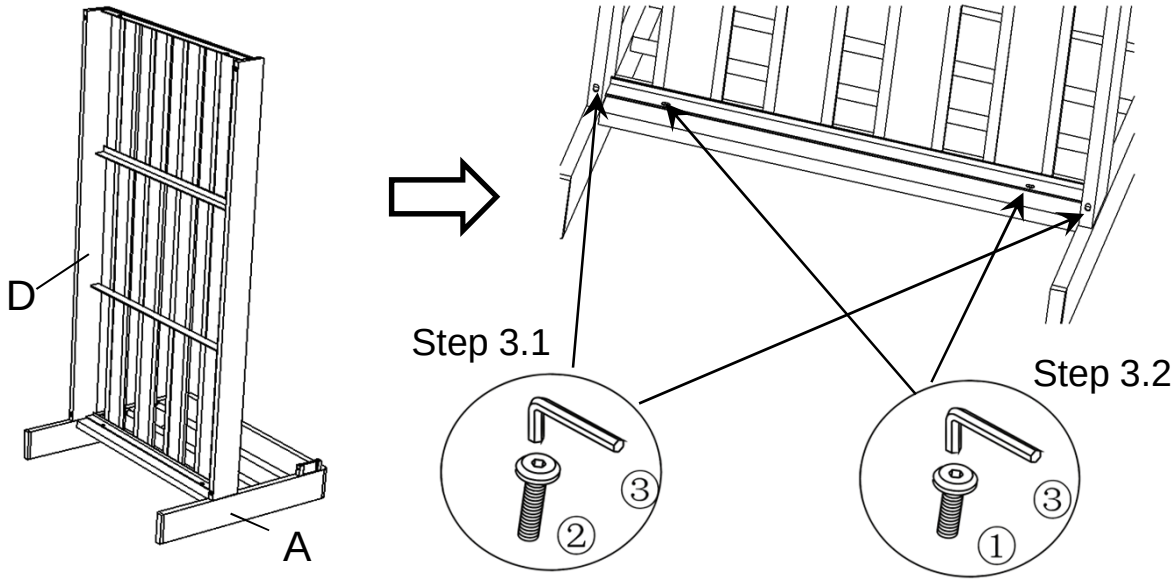

3.1)Attach Seat(D) and Left Side Panel(A) using Bolt(②) with Allen Key(③) as shown in the picture.
3.2)Attach Seat(D) and Left Side Panel(A) using Bolt(①) with Allen Key(③) as shown in the picture.
Do not fully tighten the Bolt.

Step 4

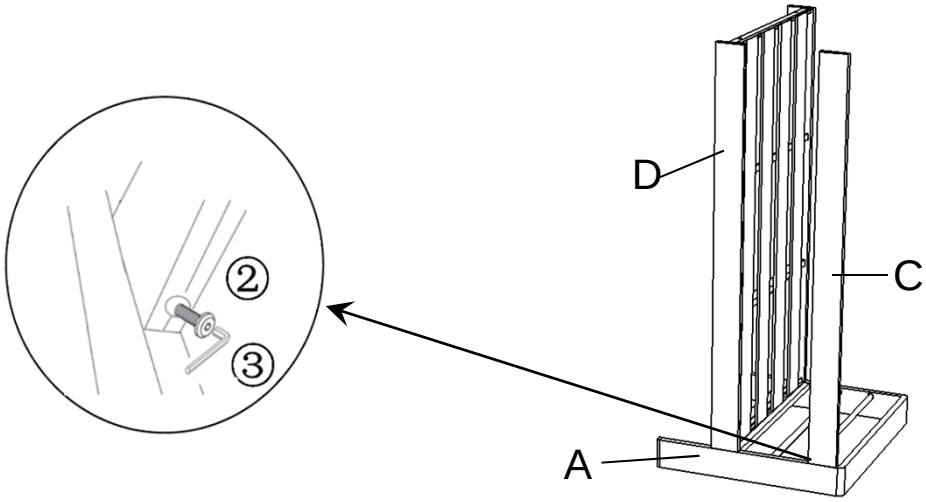

Connect the rear support rod (C) to the left panel (A) using an inner hexagon wrench (3) and bolts (2) as shown.
Do not tighten the bolt completely.

Step 5

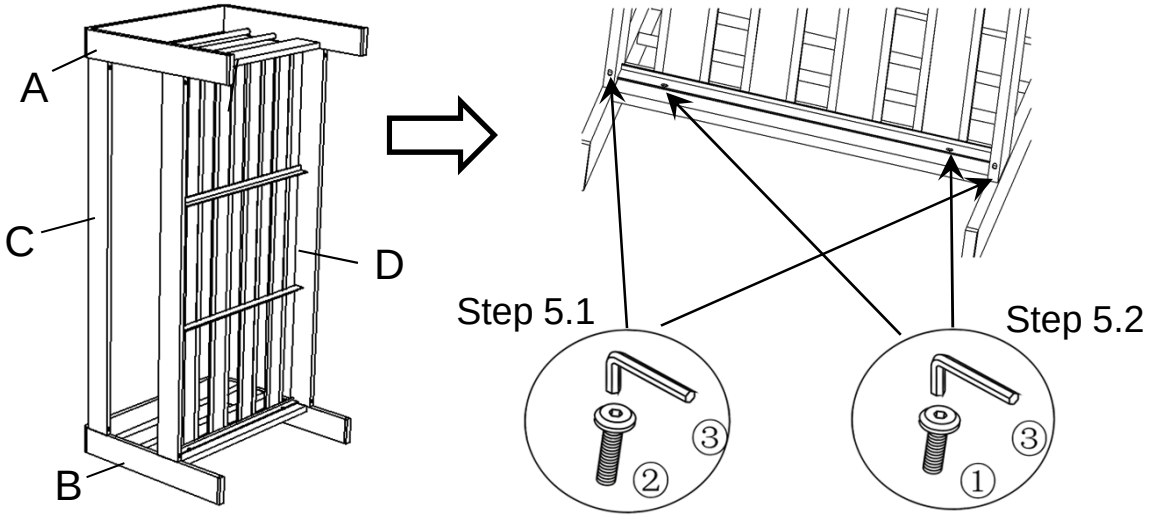

5.1)Attach Seat(D) and Right Side Panel(B) using Bolt(②) with Allen Key(③) as shown in the picture.
5.2)Attach Seat(D) and Right Side Panel(B) using Bolt(①) with Allen Key(③) as shown in the picture.
Do not fully tighten the Bolt.

Step 6

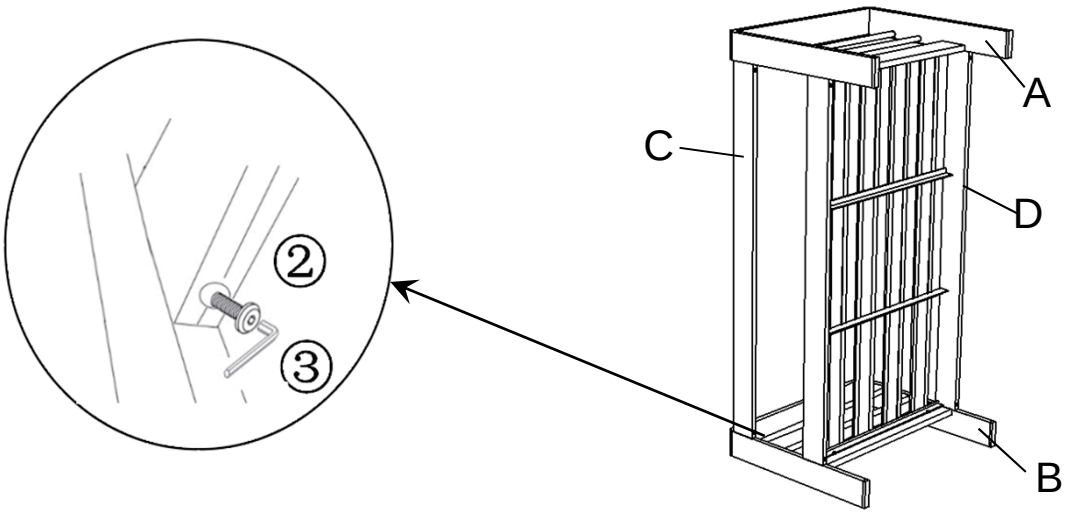

As shown, bolt (2) and connect the rear support rod (C) to the right panel (B) with an inner hexagon wrench (3). Loosen bolt not completely.

Step 7

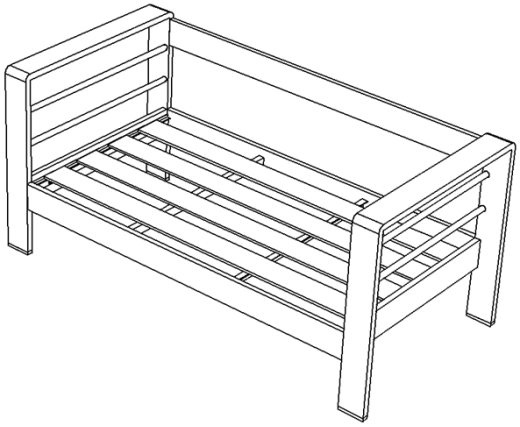

Set up the love sofa.
Place the love sofa on a level.
Check and ensure that all parts are fully connected.
Sit gently and carefully on the sofa.
This will help align all the parts at all the joints.
Then carefully leave the sofa and tighten all the bolts in sequence.
When tightening bolts, tighten them in sequence.
Do not tighten any bolts completely and proceed to the next bolt.
This can lead to distortion of the frame.
If there is still shaking, loosen the bolt and perform the same procedure.
If the sofa is unstable, the product may be damaged.
Note: this step is best done with the help of a second adult.

Step 8

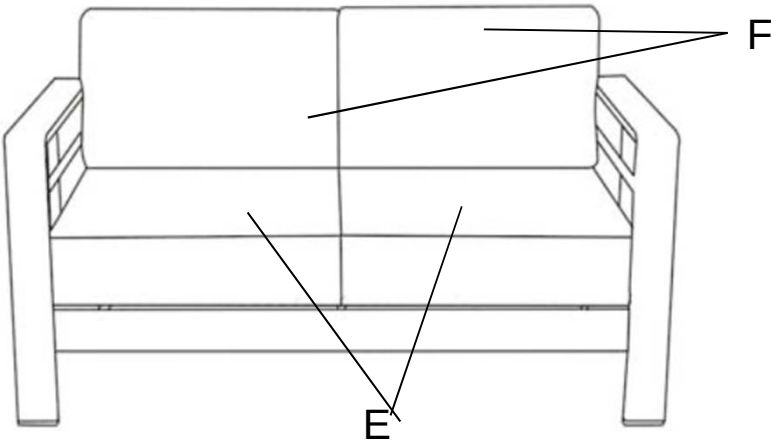

Put the seat cushion (E) and cushion (F) on the love sofa.
Then stick the Velcro from the back pad to the seat cushion. Your sofa is ready.

Care & Maintenance

- Do not put hot items directly on furniture surface
- Do not clean furniture with harsh cleansers or polish.
- To obtain the longest lifespan of your outdoor prodcts, minimizing exposure to direct sunlight is recommended.
- Children should not climb or jump on the furniture.
- Do not write on furniture without a padded barrier to protect the surface.
- To obtain the longest lifespan of your outdoor products, avoid extended and lengthy exposure to rain, snow, and direct sunshine. Whenever possible cover the product and /or place under patio or awnings.
- Not for commercial use. For residential use only .
- Stains may be removed with mild soap solution and damp cloth.
- Keep away from sources of ignition.

- Dust and pick-up spills using a clean, non-colored, lint-free cloth.

Assembly Instructions

Caution: You must read this before you proceed

Single Chair

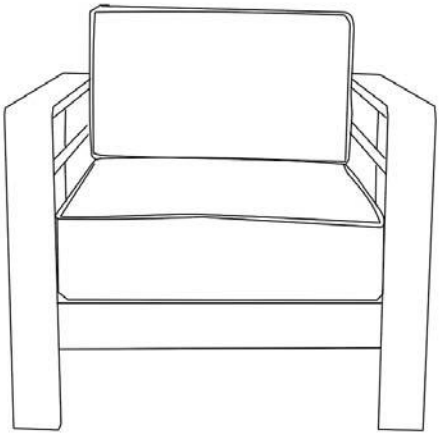

Parts List

Label	Picture	Description	QTY
A	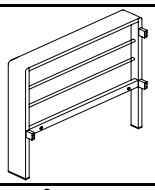	Left Side Panel	1
B	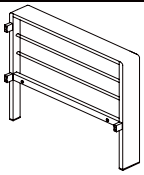	Right Side Panel	1
C	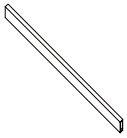	Back Support Bar	1
D	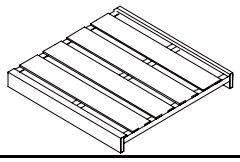	Seat (Labeled with face and bottom)	1
E	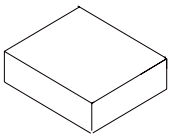	Seat Cushion	1
F	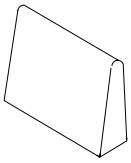	Back Cushion	1

Hardware

Label	Picture	Description	QTY
①	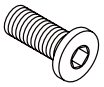	Bolt:M6*20MM	5
②	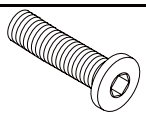	Bolt:M6*25MM	7
③	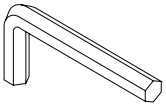	Allen Key	1

Assembly Preparation

Before Beginning Assembly:

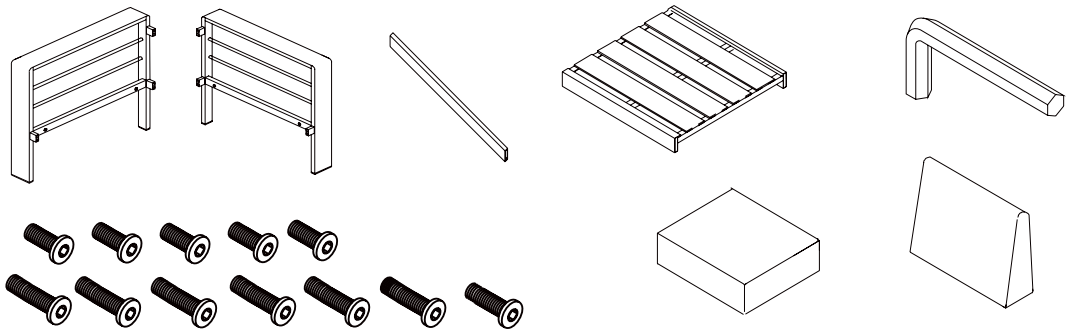

- Read instructions, cover to cover-
- Have 2 adults on hand for assembly-
- Do not assemble on flooring or carpet-
- Assemble on a clean non-marring surface (packing foam)-
- Save all packaging until finished-

Assembly Steps

Step 1

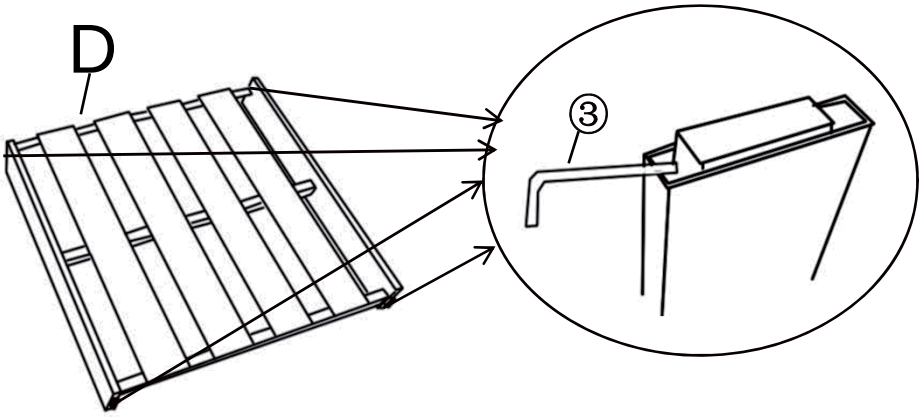

Take out the silders in the four ends of the Seatboard(D) using Allen Key(③).

Step 2

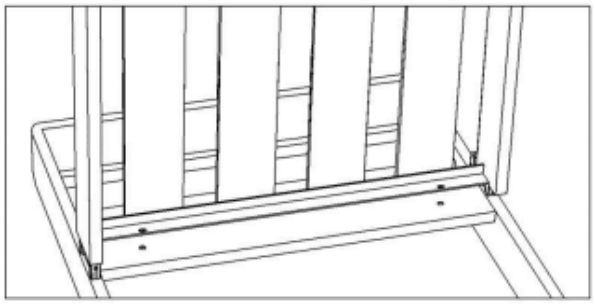

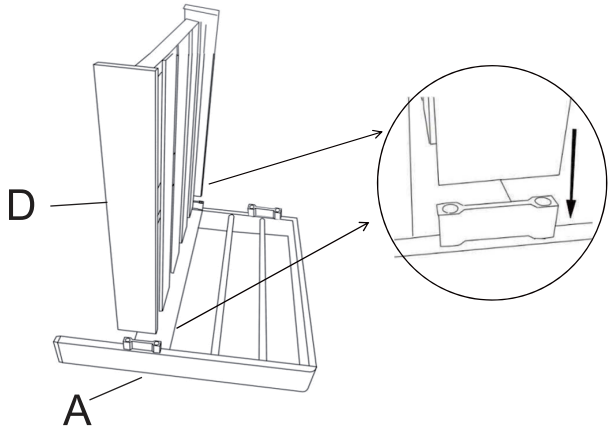

Insert the Seat(D) onto the Le t Side Panel(A), as shown in the picture.
If you found the seat (D) didn't line up with the Side panel(A) ,please reverse the seat(D) to match up the mounting position.

Step 3

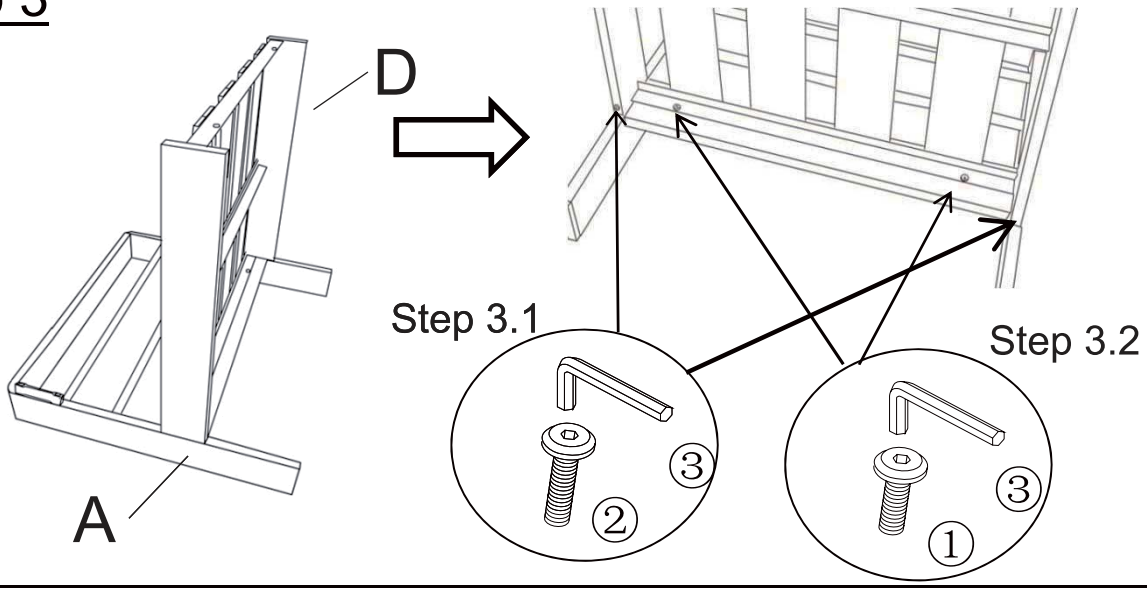

3.1) Attach Seat(D) and Left Side Panel(A) using Bolt(②) with Allen Key(③) as shown in the picture.
3.2) Attach Seat(D) and Left Side Panel(A) using Bolt(①) with Allen Key(③) as shown in the picture.
Do not fully tighten the Bolt.

Step 4

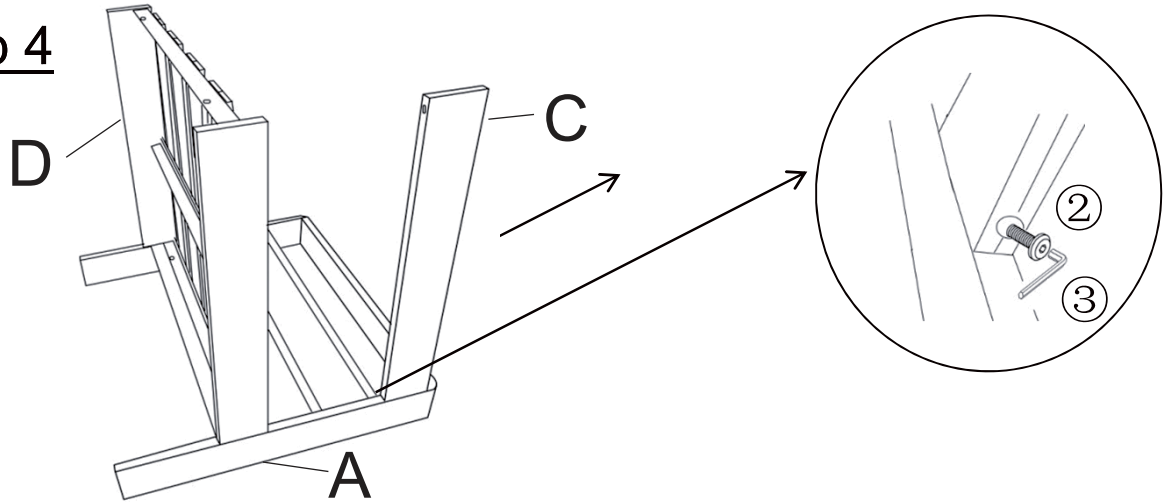

Attach Back Support Bar(C) to Left Side Panel(A) using Bolt(②) with Allen Key(③).
Do not fully tighten the Bolt.

Step 5

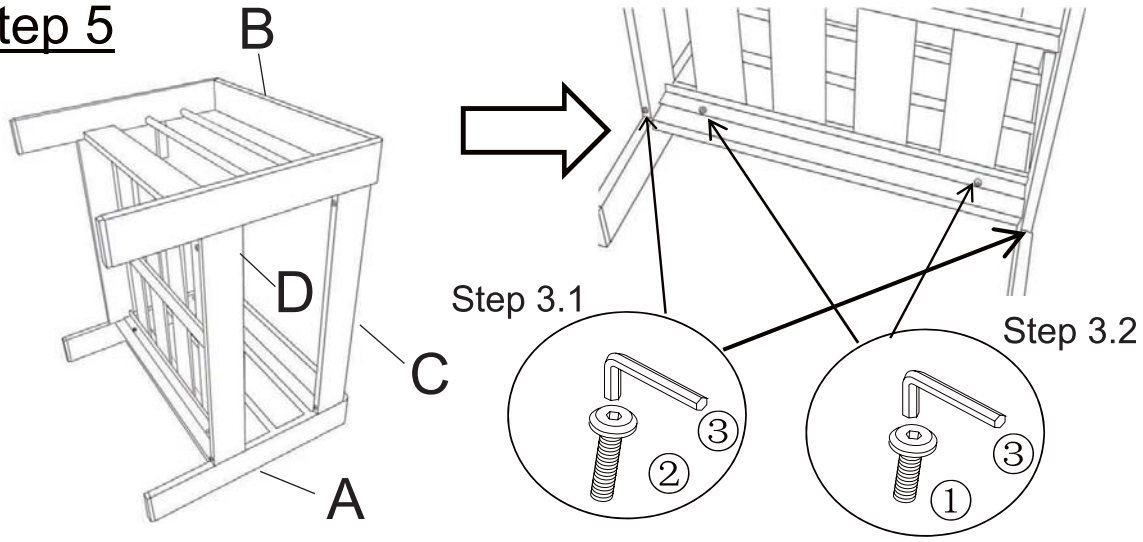

5.1) Attach Seat(D) and Right Side Panel(B) using Bolt(②) with Allen Key(③) as shown in the picture.
5.2) Attach Seat(D) and Right Side Panel(B) using Bolt(①) with Allen Key(③) as shown in the picture.

Place chair upright and test for stability.
Then in a sequential manner, **proceed to fully tighten all Bolts at all joints.**

Step 6

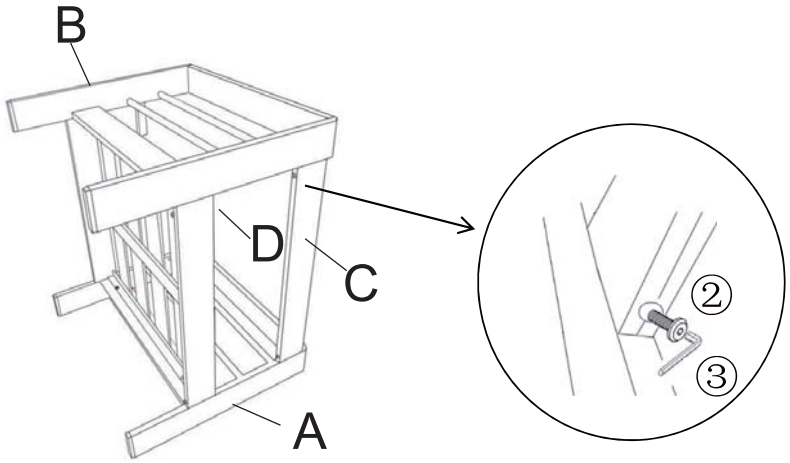

Attach Back Support Bar(C) to Side Panel(B) using Bolt(②) with Allen Key(③).
Loosely tighten the Bolt.

Step 7

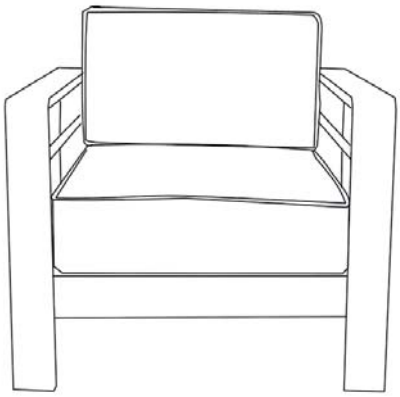

Stand the Chair up.
Put Back Cushion(E) and Seat Cushion(F) on the Chair, and stick the vercro.
Your Single Chair is ready for use.

Care &Maintenance

- Do not put hot items directly on furniture surface
- Do not clean furniture with harsh cleansers or polish.
- To obtain the longest lifespan of your outdoor prodcts, minimizing exposure to direct sunlight is recommended.
- Children should not climb or jump on the furniture.
- Do not write on furniture without a padded barrier to protect the surface.
- To obtain the longest lifespan of your outdoor products, avoid extended and lengthy exposure to rain, snow, and direct sunshine. Whenever possible cover the product and /or place under patio or awnings.
- Not for commercial use. For residential use only .
- Stains may be removed with mild soap solution and damp cloth.
- Keep away from sources of ignition.

- Dust and pick-up spills using a clean, non-colored, lint-free cloth.

Assembly Instructions

Caution : You must read this before you proceed

Left Sofa

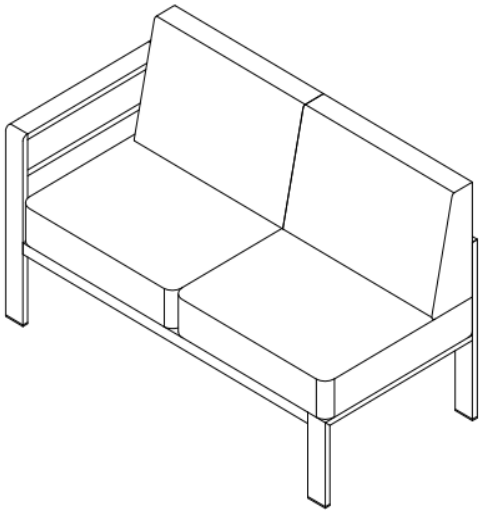

Parts List

Label	Picture	Description	QTY
A		Side Panel	1
B		Back Support Bar	1
C	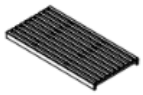	Seat Panel (Labeled with 'face' and 'bottom')	1
D		Leg Support Bar	1
E	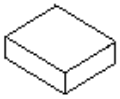	Seat Cushion	2
F	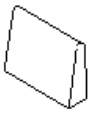	Back Cushion	2

Hardware

Label	Picture	Description	QTY
①		Bolt (M6*20MM)	11
②	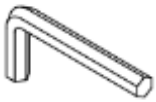	Allen Key	1

Assembly Preparation

Before Beginning Assembly:

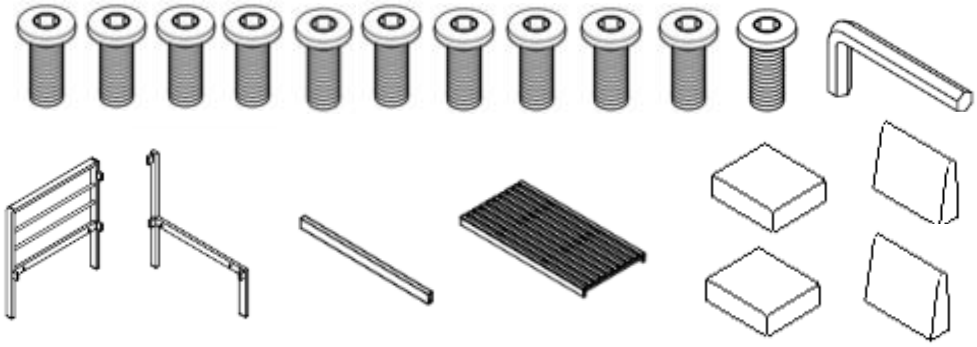

- Read instructions, cover to cover-
- Have 2 adults on hand for assembly-
- Do not assemble on flooring or carpet-
- Assemble on a clean non-marring surface (packing foam)-
- Save all packaging until finished-

Assembly Steps

Overview

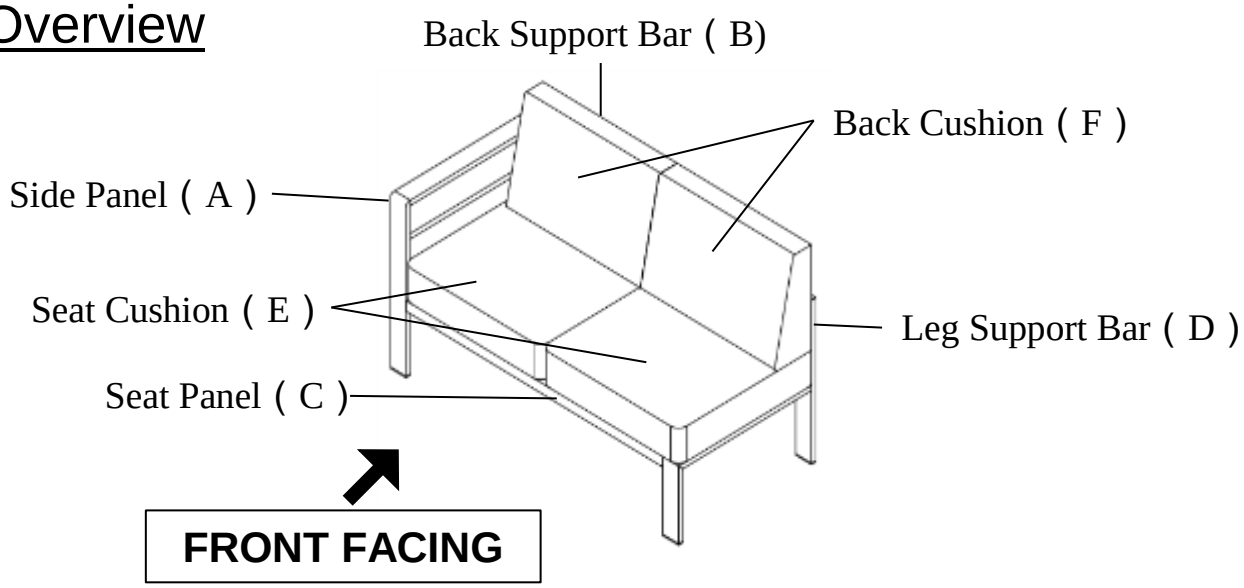

This Sofa has multiple parts and may require up to 30 minutes to assemble. To give you an overview of the Sofa parts, the above picture is to help you put the various parts into perspective. Please read through the instructions below to familiarise yourself with the parts and steps before assembly.

Step 1

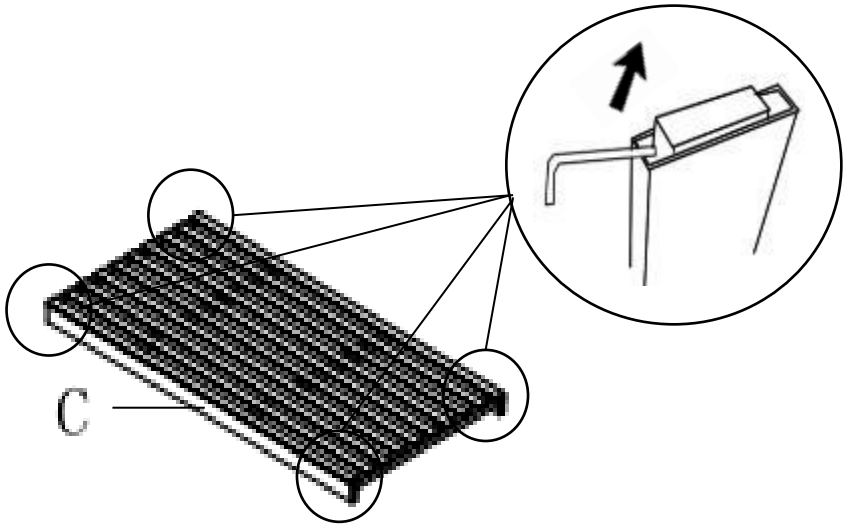

Open the carton and place all the parts onto a clean, non-marring surface.
Remove the plastic plugs(prevent the alum tube was scratched) in the four ends of the Seat Board(C) using Allen Key(②) as shown above.

Step 2

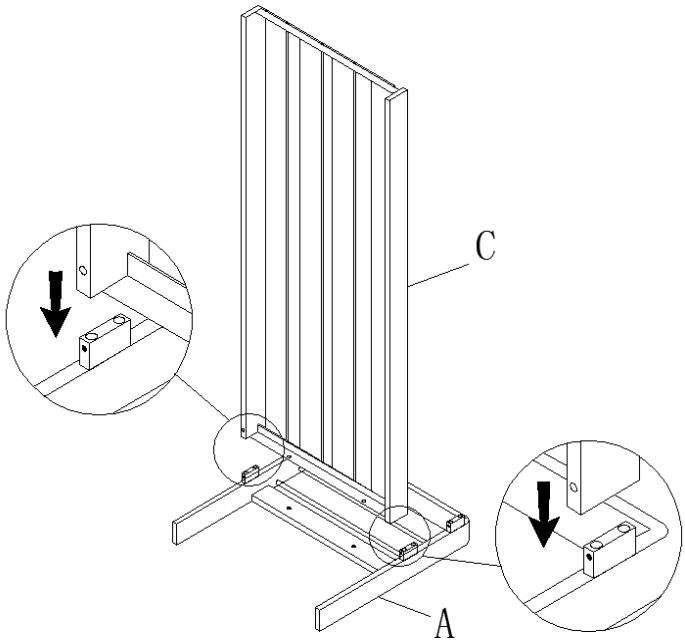

Place the Side Panel(A) with its inside facing up.
Insert Seat Panel(C) into the Side Panel(A).

Step 3

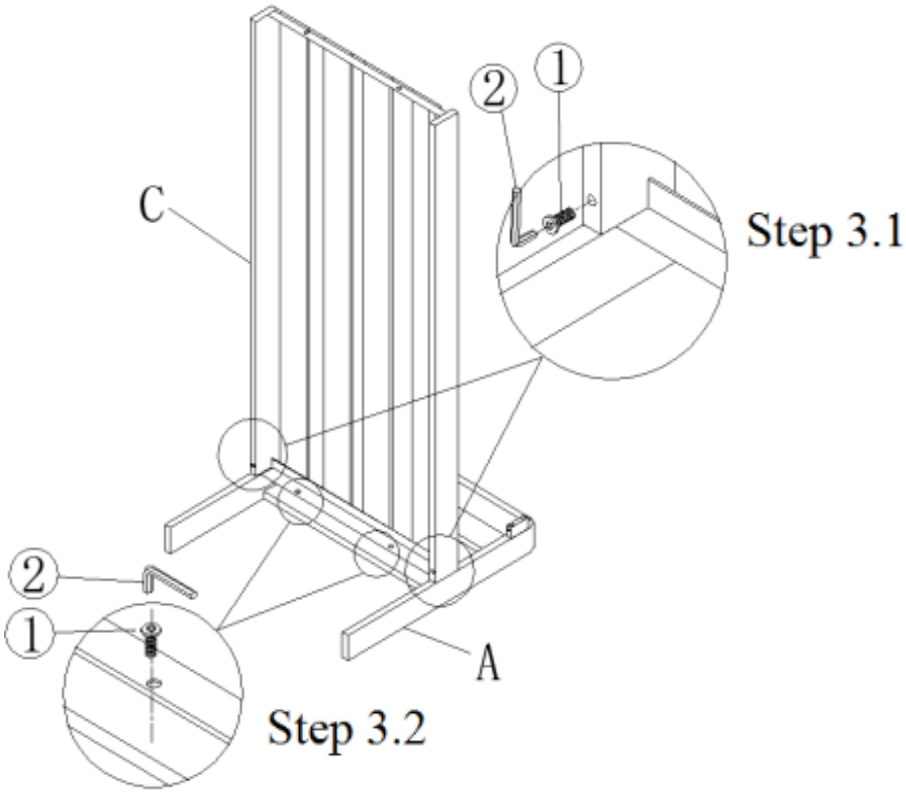

3.1) Attach the Seat Panel(C) to Side Panel(A) using Bolts(①) with Allen Key(②) as shown above.
3.2) Attach the Seat Panel(C) to Side Panel(A) using Bolts(①) with Allen Key(②) as shown above.
Do not fully tighten Bolts.

Step 4

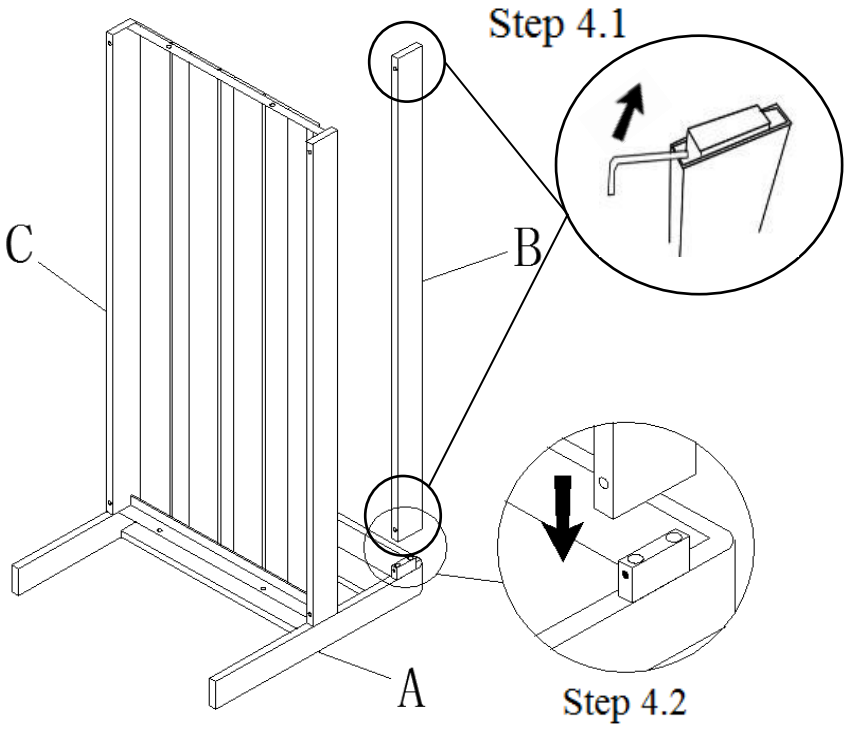

4.1) Remove the plastic plugs(prevent the alum tube was scratched) in the both ends of Back Support Bar (B) using Allen Key(②) as shown above.
4.2) Insert the Back Support Bar(B) into the Side Panel(A).

Step 5

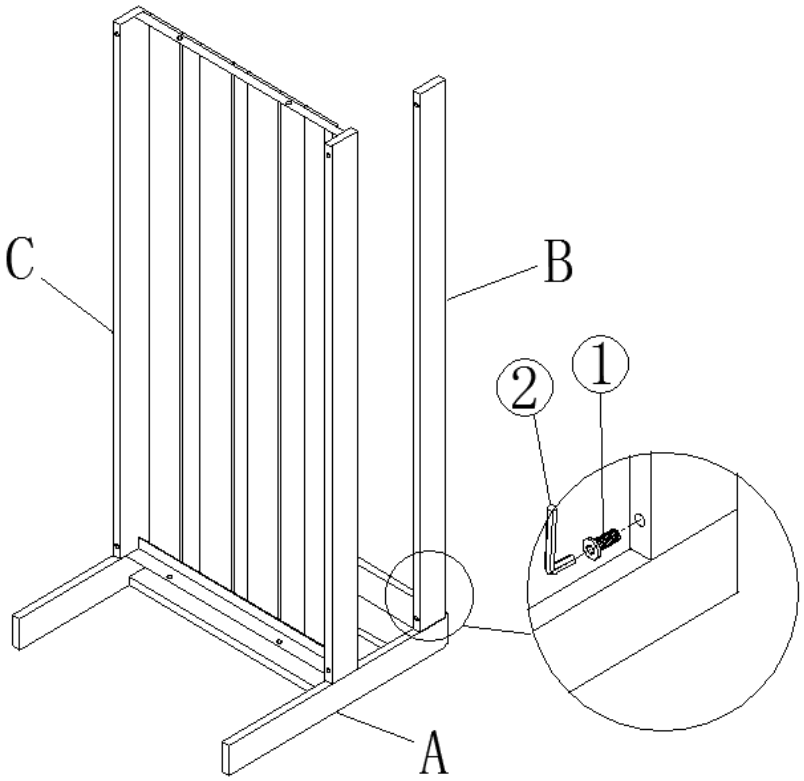

Attach the Back Support Bar(B) to the Side Panel(A) using Bolt(①) with Allen Key(②).
Do not fully tighten Bolt.

Step 6

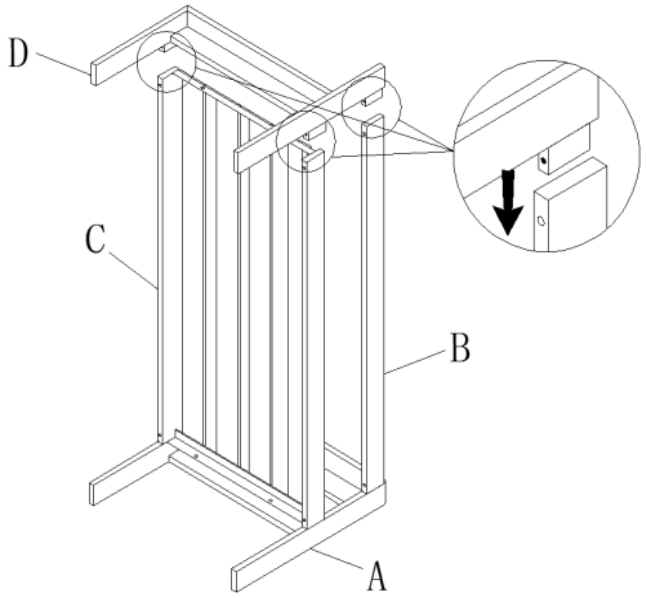

Insert the Leg Support Bar(D) into the Back Support Bar(B) and Seat Panel(C) as shown above.

Step 7

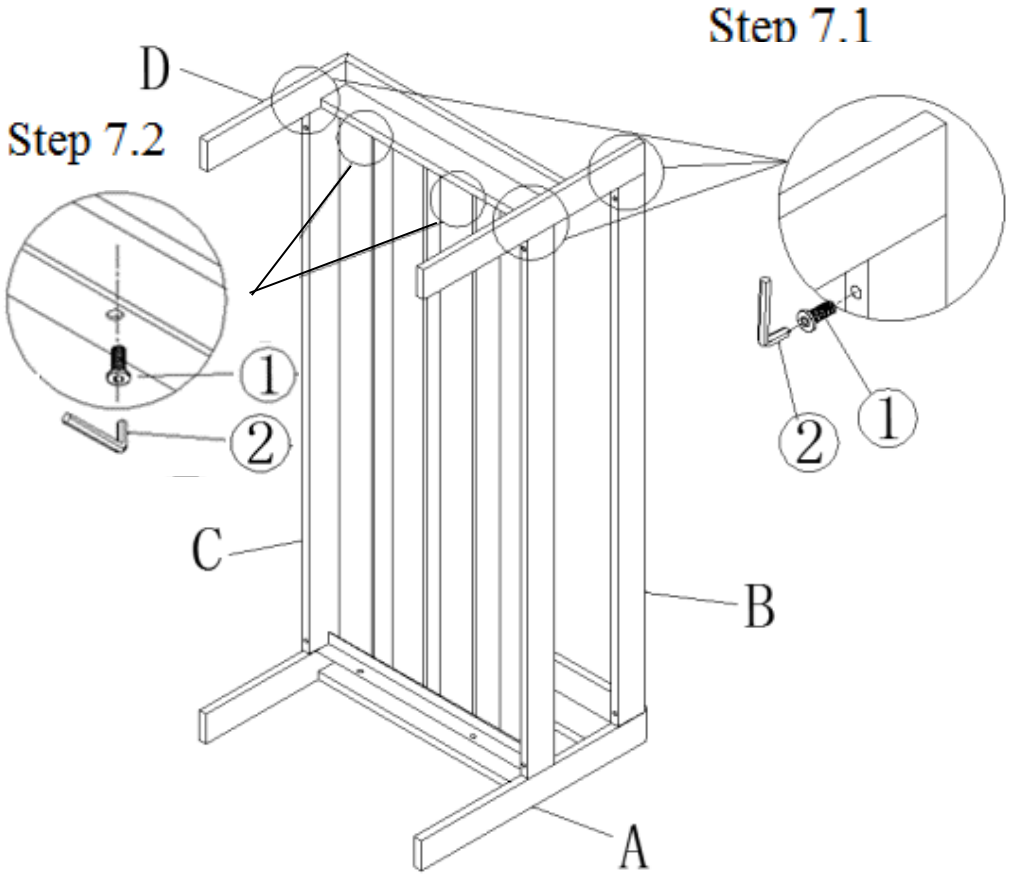

7.1) Attach the Leg Support Bar(D) to Back Support Bar(B) and Seat Panel(C) using Bolts(①) with Allen Key(②) as shown above.
7.2) Attach the Leg Support Bar(D) to Seat Panel(C) using Bolt(①) with Allen Key(②) as shown above.
Do not fully tighten Bolts.

Step 8

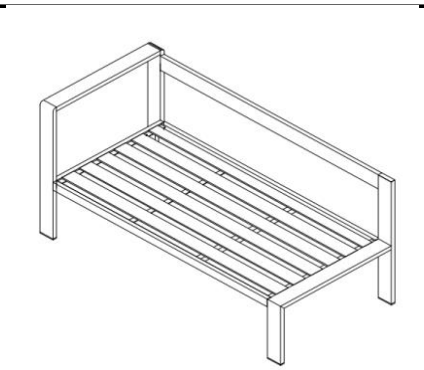

Stand the Sofa up.
Place the Sofa on a LEVEL SURFACE.
Inspect it and make sure all parts are adequately connected.
Gently and carefully, sit onto to the Sofa.
This will help to align all parts at all the joints.
Then get off the Sofa, and in a sequential manner, proceed to tighten all Bolts.

When tightening the Bolts, tighten sequentially.
DO NOT tighten any Bolt fully and then move on to the next one.
This may cause the frame to warp.
If there are still wobbles, loosen the Bolts and execute the same process.
If the Sofa is not stable it could lead to damage to the product.

Note: This step is done best with the assistance of a second adult.

Step 9

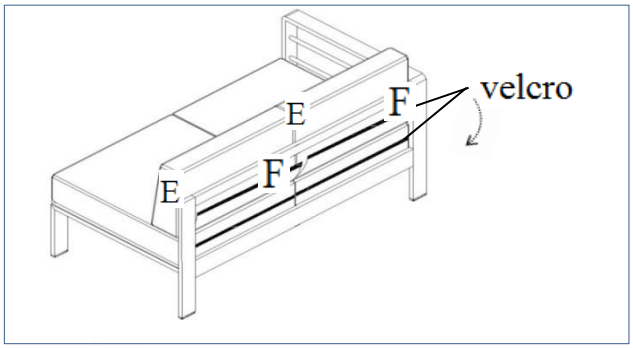

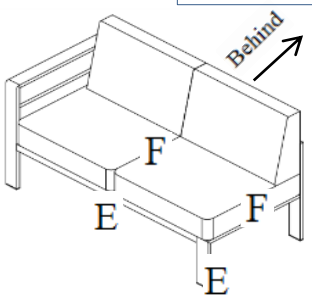

Put Seat Cushions(E) and Back Cushions(F) on the Sofa and stick the velcro from back cushion to seat cushion as shown above.
Your Left Sofa is ready for use.

Care &Maintenance

- Do not put hot items directly on furniture surface
- Do not clean furniture with harsh cleansers or polish.
- To obtain the longest lifespan of your outdoor prodcts, minimizing exposure to direct sunlight is recommended.
- Children should not climb or jump on the furniture.
- Do not write on furniture without a padded barrier to protect the surface.
- To obtain the longest lifespan of your outdoor products, avoid extended and lengthy exposure to rain, snow, and direct sunshine. Whenever possible cover the product and /or place under patio or awnings.
- Not for commercial use. For residential use only .
- Stains may be removed with mild soap solution and damp cloth.

- ✓ Dust and pick-up spills using a clean, non-colored, lint-free cloth .

What is Proposition 65?

Proposition 65 is a California law that requires warning labels on products that may contain one of more than 800-plus chemicals or ingredients that the California Office of Environmental Health Hazard Assessment (OEHHA) has deemed to cause cancer or other reproductive toxicity. Chemicals and elements on this list include wood dust, brass, and other everyday substances, which can be found in very common household items, such as: lamps, tableware, jewelry, crystal glasses, electric cords, beauty products, automobiles, and furniture.

Why Did I Find a Proposition 65 Warning on My Home Goods Product?

We include Proposition 65 warnings on all of our products because there is always a chance that one of the 800-plus common chemicals and ingredients listed under this law could potentially be on our furniture or packing materials. We risk large fines under this law, if we don't include this warning.

Should I worry?

We realize you may be worried finding this warning on our products, but we want to reassure you that the hazardous exposure limits for any of these chemicals have never been found on furniture products that we've shipped to our customers. Additionally, this warning label is very common and can be found on almost every piece of furniture sold in the state of California.

Just How Common Are Proposition 65 Warnings?

Proposition 65 warnings have become so common in California that it is hard to take a trip to a local bank, grocery store, or restaurant without finding at least one warning. In fact, even the Disney Land Resort has a Proposition 65 warning:

Assembly Instructions

Caution : You must read this before you proceed

Right Sofa

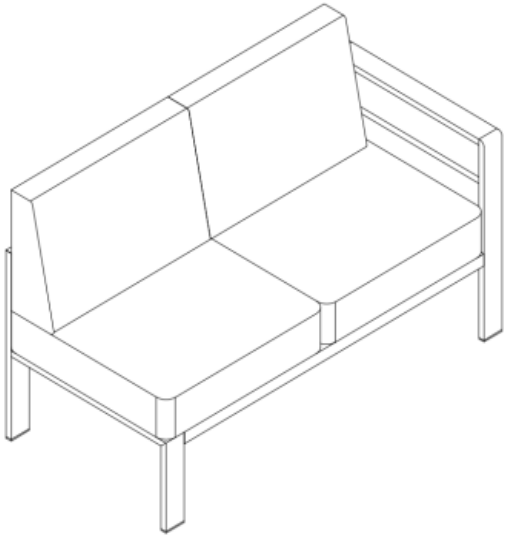

Parts List

Label	Picture	Description	QTY
A		Side Panel	1
B		Back Support Bar	1
C	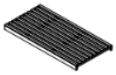	Seat Panel (Labeled with 'face' and 'bottom')	1
D		Leg Support Bar	1
E	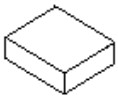	Seat Cushion	2
F	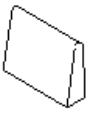	Back Cushion	2

Hardware

Label	Picture	Description	QTY
①		Bolt (M6*20MM)	11
②		Allen Key	1

Assembly Preparation

Before Beginning Assembly:	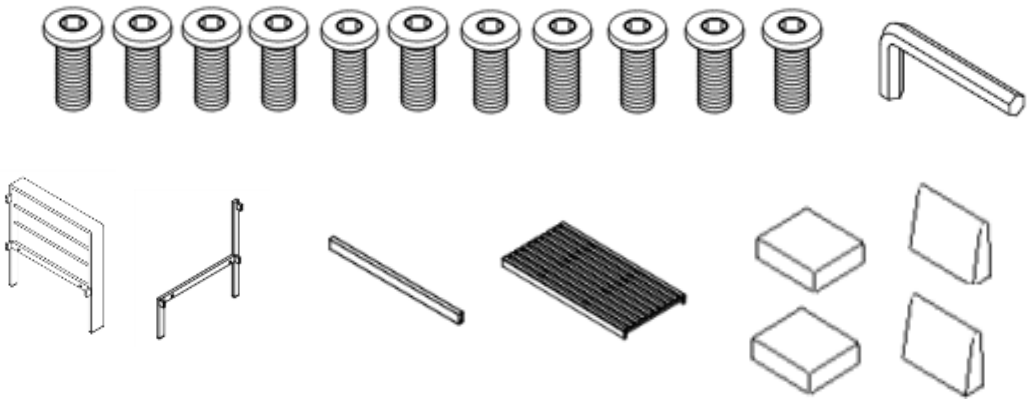

- Read instructions, cover to cover-

- Have 2 adults on hand for assembly-

- Do not assemble on flooring or carpet-

- Assemble on a clean non-marring surface (packing foam)-

- Save all packaging until finished-

Assembly Steps

Overview

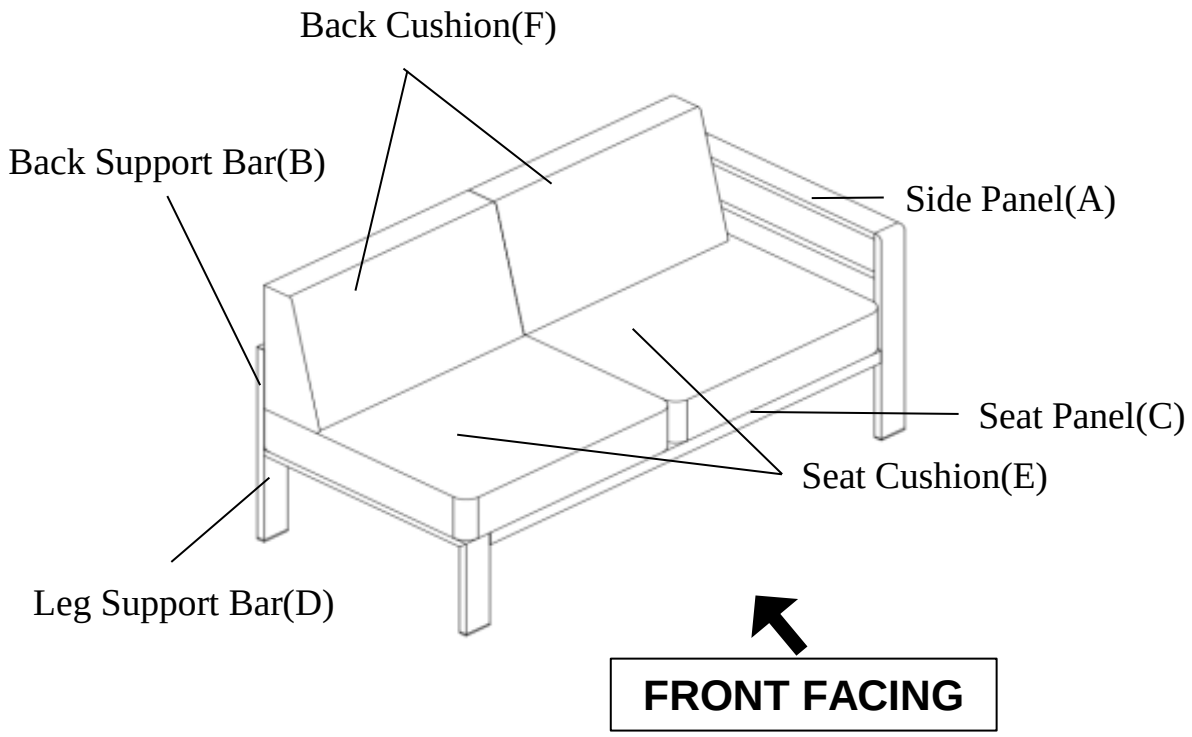

This Sofa has multiple parts and may require up to 30 minutes to assemble. To give you an overview of the Sofa parts, the above picture is to help you put the various parts into perspective. Please read through the instructions below to familiarise yourself with the parts and steps before assembly.

Step 1

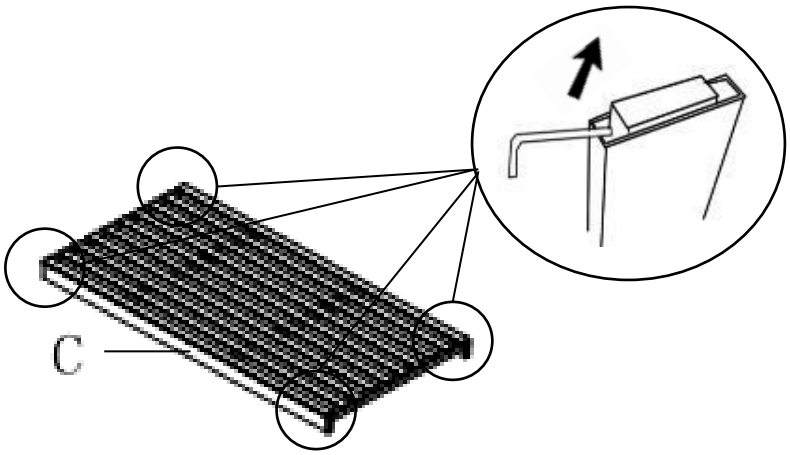

Open the carton and place all the parts onto a clean, non-marring surface.
Take out the plastic plug (prevent the alum tube was scratched) in the four ends of the Seat Board(C) using Allen key (②) as shown above.

Step 2

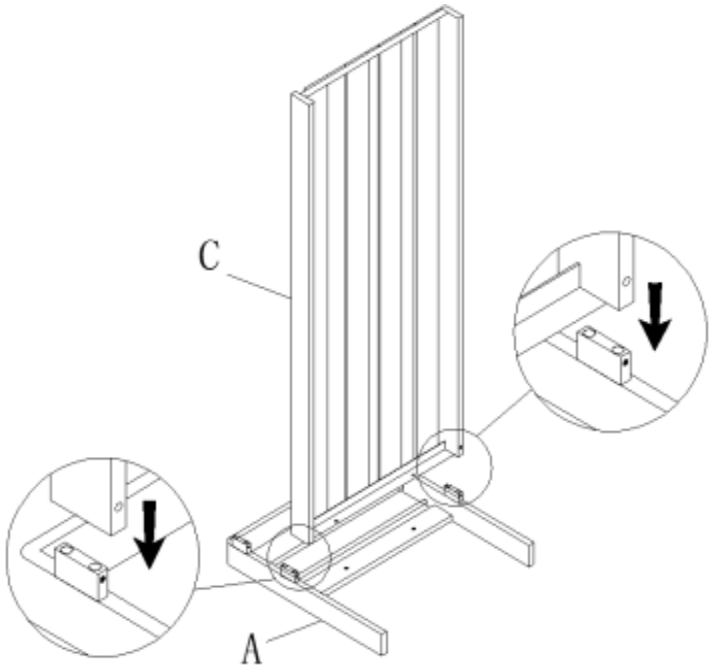

Place the Side Panel(A) with its inside facing up.
Insert Seat Panel(C) into the Side Panel(A).

Step 3

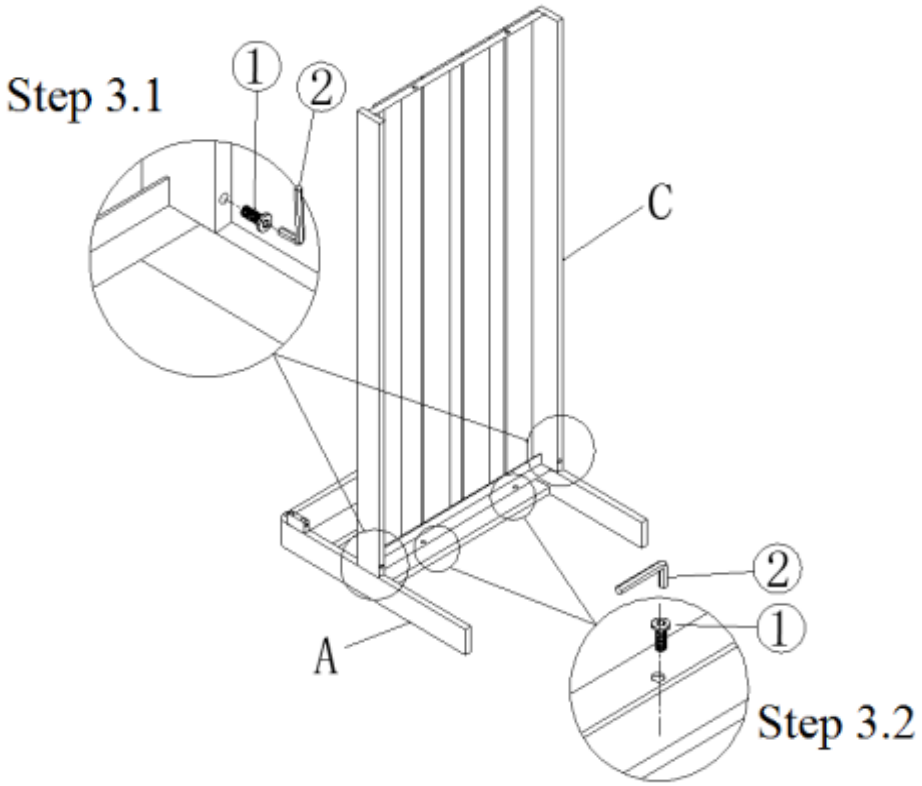

3.1) Attach the Seat Panel(C) to Side Panel(A) using Bolts(①) with Allen Key(②) as shown above.
3.2) Attach the Seat Panel(C) to Side Panel(A) using Bolts(①) with Allen Key(②) as shown above.
Do not fully tighten Bolts.

Step 4

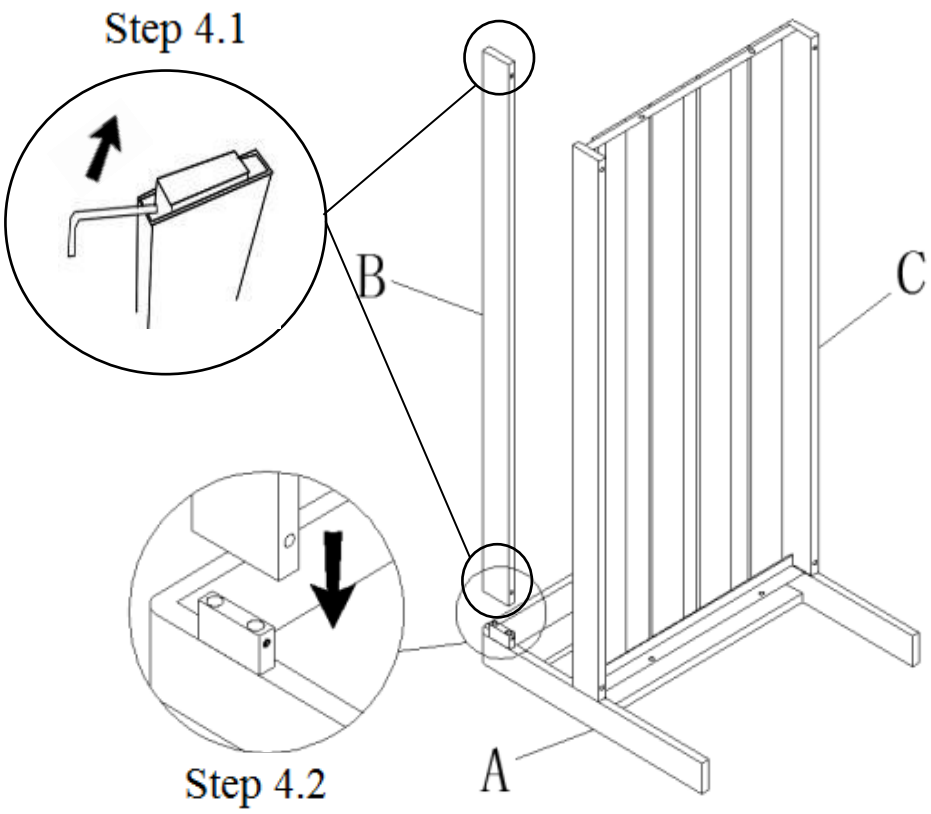

4.1) Remove the plastic plugs(prevent the alum tube was scratched) in the both ends of Back Support Bar (B) using Allen Key(②) as shown above.
4.2) Insert the Back Support Bar(B) into the Side Panel(A).

Step 5

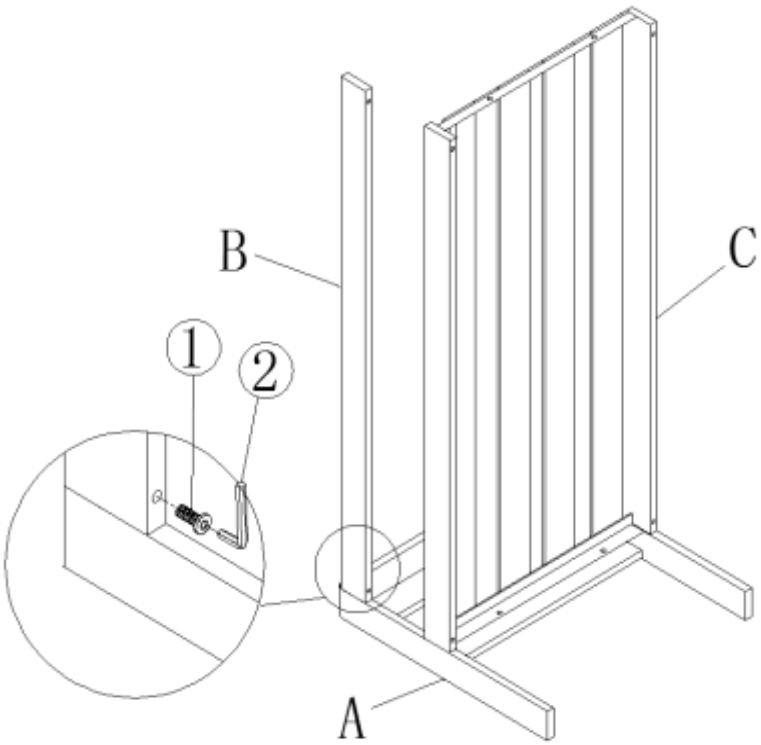

Attach the Back Support Bar(B) to the Side Panel(A) using Bolt(①) with Allen Key(②).
Do not fully tighten Bolt.

Step 6

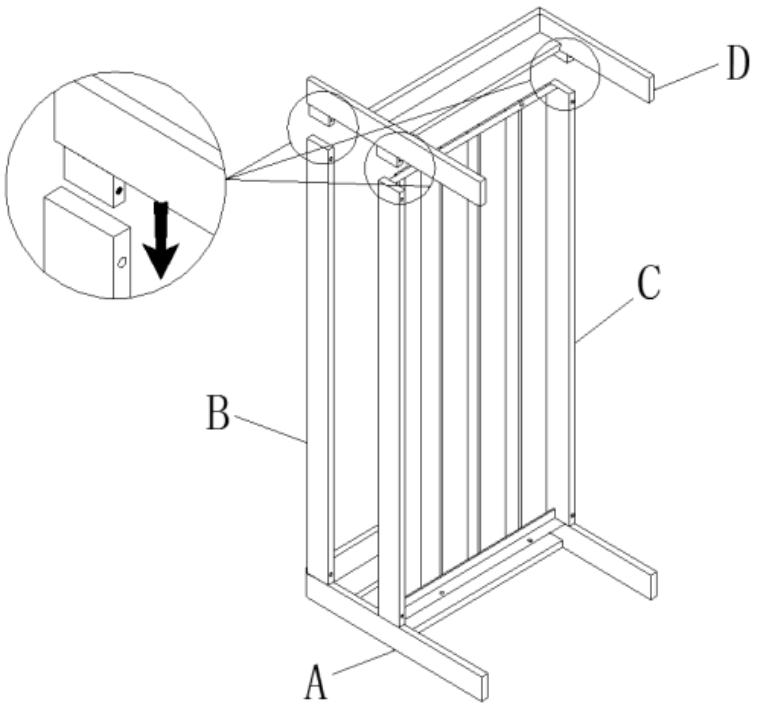

Insert the Leg Support Bar(D) into the Back Support Bar(B) and Seat Panel(C) as shown above.

Step 7

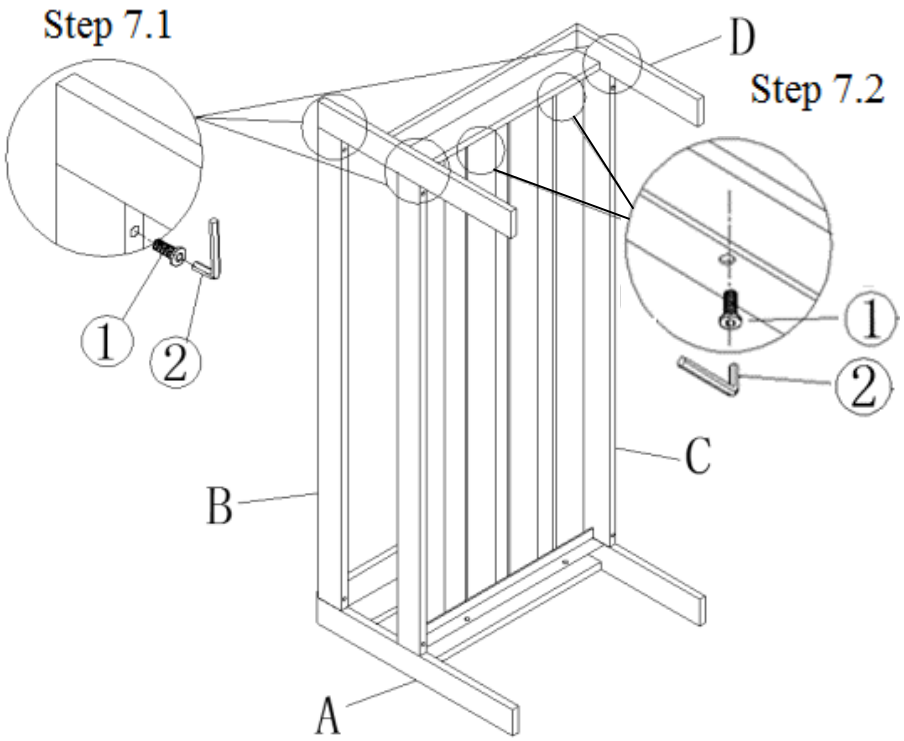

7.1) Attach the Leg Support Bar(D) to Back Support Bar(B) and Seat Panel(C) using Bolts(①) with Allen Key(②) as shown above.
7.2) Attach the Leg Support Bar(D) to Seat Panel(C) using Bolt(①) with Allen Key(②) as shown above.
Do not fully tighten Bolts.

Step 8

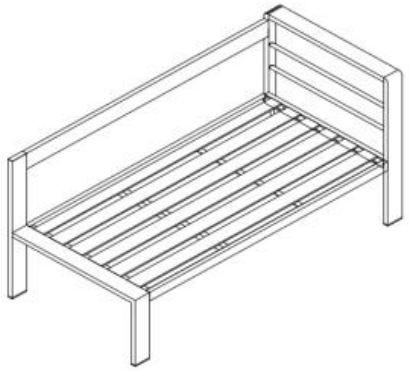

Stand the Sofa up.
Place the Sofa on a LEVEL SURFACE.
Inspect it and make sure all parts are adequately connected.
Gently and carefully, sit onto to the Sofa.
This will help to align all parts at all the joints.
Then get off the Sofa, and in a sequential manner, proceed to tighten all Bolts.

When tightening the Bolts, tighten sequentially.
DO NOT tighten any Bolt fully and then move on to the next one.
This may cause the frame to warp.
If there are still wobbles, loosen the Bolts and execute the same process.
If the Sofa is not stable it could lead to damage to the product.

Note: This step is done best with the assistance of a second adult.

Step 9

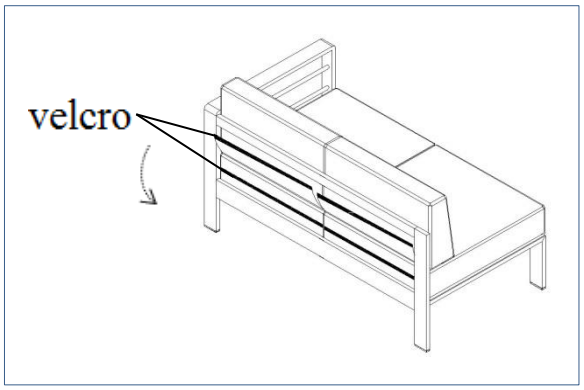

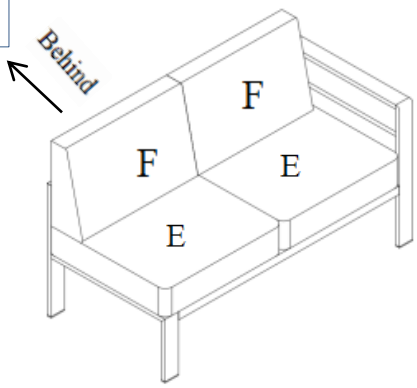

Put Seat Cushions(E) and Back Cushions(F) on the Sofa and stick the velcro from back cushion to seat cushion as shown above.
Your Right Sofa is ready for use.

Care &Maintenance

- Do not put hot items directly on furniture surface
- Do not clean furniture with harsh cleansers or polish.
- To obtain the longest lifespan of your outdoor prodcts, minimizing exposure to direct sunlight is recommended.
- Children should not climb or jump on the furniture.
- Do not write on furniture without a padded barrier to protect the surface.
- To obtain the longest lifespan of your outdoor products, avoid extended and lengthy exposure to rain, snow, and direct sunshine. Whenever possible cover the product and /or place under patio or awnings.
- Not for commercial use. For residential use only .
- Stains may be removed with mild soap solution and damp cloth.

- ✓ Dust and pick-up spills using a clean, non-colored, lint-free cloth .

What is Proposition 65?

Proposition 65 is a California law that requires warning labels on products that may contain one of more than 800-plus chemicals or ingredients that the California Office of Environmental Health Hazard Assessment (OEHHA) has deemed to cause cancer or other reproductive toxicity. Chemicals and elements on this list include wood dust, brass, and other everyday substances, which can be found in very common household items, such as: lamps, tableware, jewelry, crystal glasses, electric cords, beauty products, automobiles, and furniture.

Why Did I Find a Proposition 65 Warning on My Home Goods Product?

We include Proposition 65 warnings on all of our products because there is always a chance that one of the 800-plus common chemicals and ingredients listed under this law could potentially be on our furniture or packing materials. We risk large fines under this law, if we don't include this warning.

Should I worry?

We realize you may be worried finding this warning on our products, but we want to reassure you that the hazardous exposure limits for any of these chemicals have never been found on furniture products that we've shipped to our customers. Additionally, this warning label is very common and can be found on almost every piece of furniture sold in the state of California.

Just How Common Are Proposition 65 Warnings?

Proposition 65 warnings have become so common in California that it is hard to take a trip to a local bank, grocery store, or restaurant without finding at least one warning. In fact, even the Disney Land Resort has a Proposition 65 warning:

Assembly Instructions

Caution : You must read this before you proceed

Ottoman

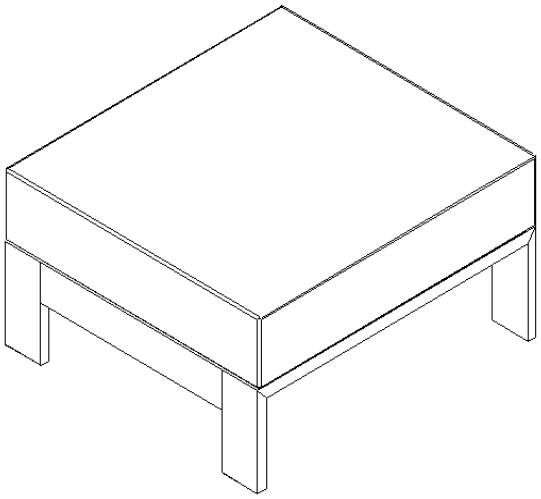

Parts List

Label	Picture	Description	QTY
A	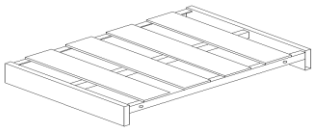	Seat	1
B	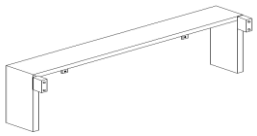	Leg	2
C	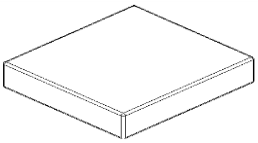	Seat Cushion	1

Hardware

Label	Picture	Description	QTY
①		Bolt (M6*10MM)	5
②		Bolt (M6*25MM)	5
③		Allen Key	1

Assembly Preparation

Before Beginning Assembly:

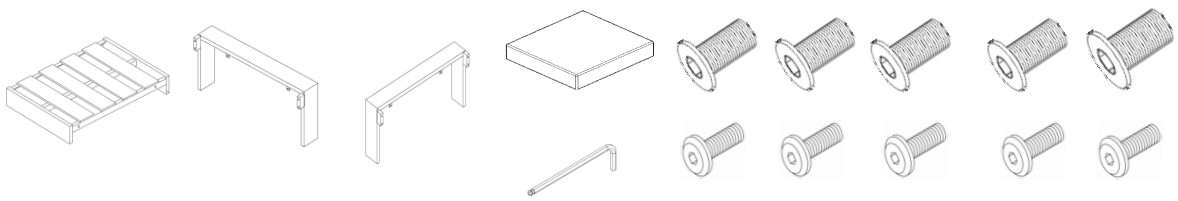

- Read instructions, cover to cover-
- Have 2 adults on hand for assembly-
- Do not assemble on flooring or carpet-
- Assemble on a clean non-marring surface (packing foam)-
- Save all packaging until finished-

Assembly Steps

Overview

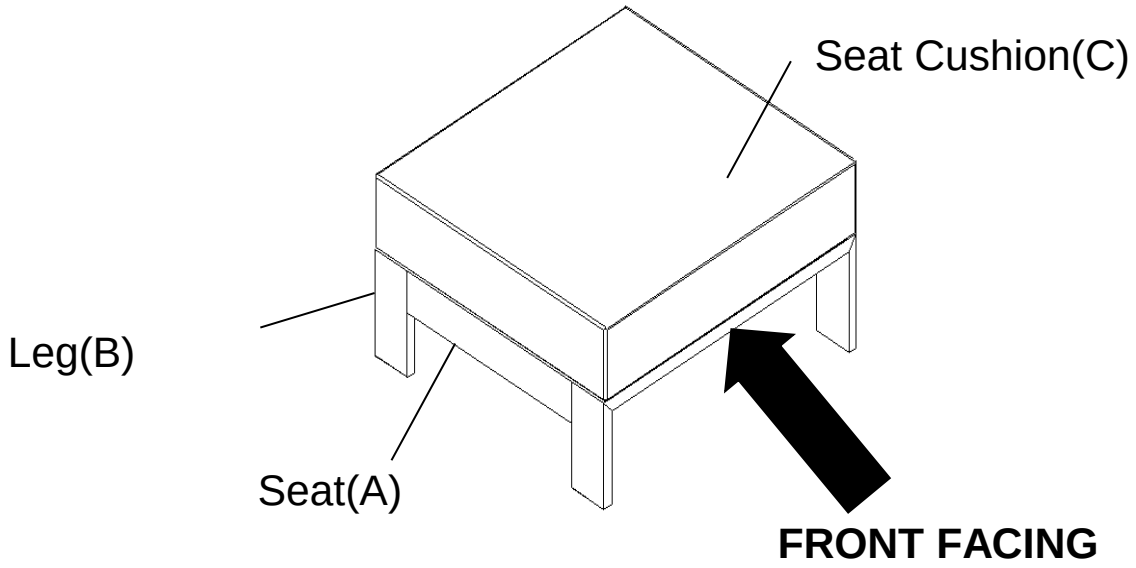

This Ottoman has multiple parts and may require up to 30 minutes to assemble. To give you an overview of the Ottoman parts, the above picture is to help you put the various parts into perspective. Please read through the instructions below to familiarise yourself with the parts and steps before assembly.

Step 1

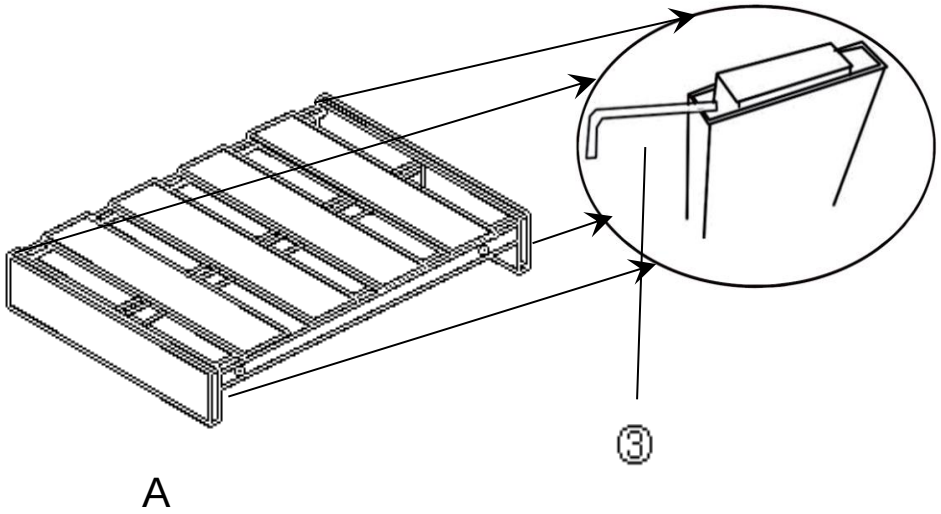

Open the carton and place all the parts onto a clean, non-marring surface.,Take out the silders in the four ends of the Seat(A) using Allen Key(③).

Step 2

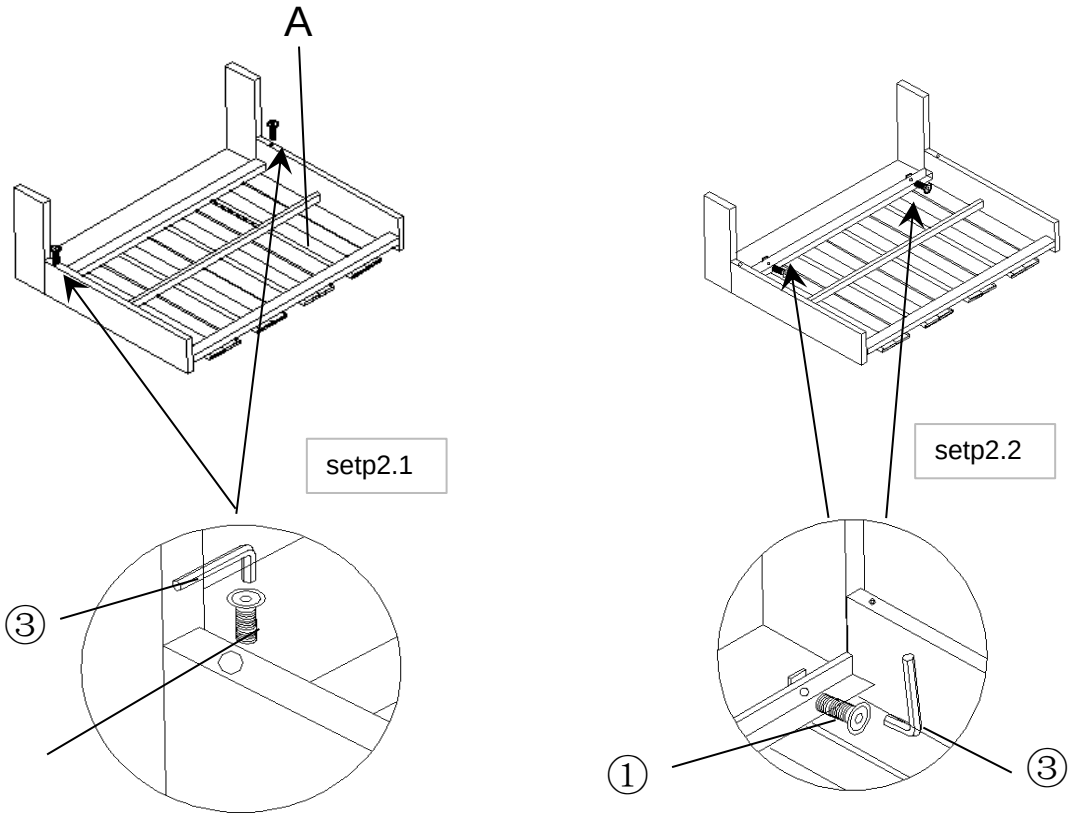

Place the seat(A) facedown.
Step2.1:Attach Leg(B) to Seat Panel(A) using Bolts(②) with Allen Key(③) as shown above
Step2.2:Attach Leg(B) to Seat Panel(A) using Bolts(①) with Allen Key(③) as shown above
Do not fully tighten the Bolts.

Step 3

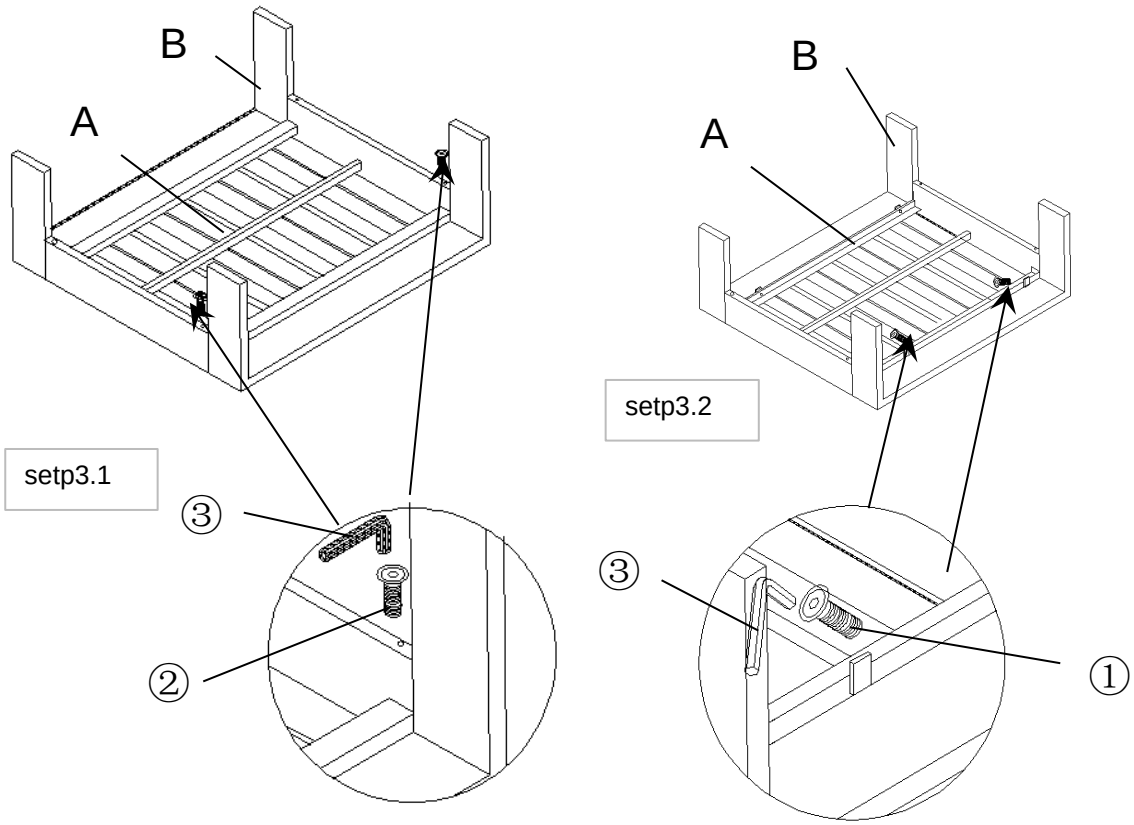

Step3.1:Attach Leg(B) to Seat(A) using Bolts(②) with Allen Key(③) as shown above
Step3.2:Attach Leg(B) to Seat(A) using Bolts(①) with Allen Key(③) as shown above
Do not fully tighten the Bolts.

Step 4

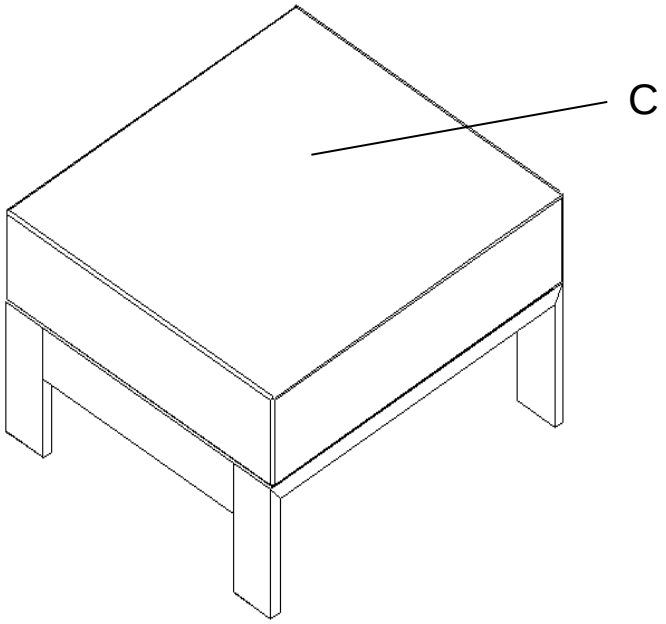

Stand the Ottoman up.
Put Seat Cushion(C) on the Ottoman
Your Ottoman is ready for use.
Place the Ottoman on a LEVEL SURFACE.
Inspect it and make sure all parts are adequately connected.
Gently and carefully sit onto the Ottoman
This will help to align all parts at all joints.Then get off the Ottoman, and in a sequential manner, proceed to tighten all Bolts. When tightening the Bolts, tighten sequentially.
DO NOT tighten any Bolt fully and then move on to the next one.
This may cause the frame to warp.
If there are still wobbles, loosen the Bolts and execute this same process.
Note: This step is done best with the assistance of a second adult.
Your Ottoman is ready for use.
This Ottoman can only be used on a flat, level surface.

Care & Maintenance

- Do not put hot items directly on furniture surface
- Do not clean furniture with harsh cleansers or polish.
- To obtain the longest lifespan of your outdoor prodcts, minimizing exposure to direct sunlight is recommended.
- Children should not climb or jump on the furniture.
- Do not write on furniture without a padded barrier to protect the surface.
- To obtain the longest lifespan of your outdoor products, avoid extended and lengthy exposure to rain, snow, and direct sunshine. Whenever possible cover the product and /or place under patio or awnings.
- Not for commercial use. For residential use only .
- Stains may be removed with mild soap solution and damp cloth.

- Dust and pick-up spills using a clean, non-colored, lint-free cloth .

Questions & Answers about Proposition 65

• What is Proposition 65?

Proposition 65 requires businesses to provide warnings to Californians about significant exposures to chemicals that cause cancer, birth defects or other reproductive harm. These chemicals can be in the products that Californians purchase, in their homes or workplaces, or that are released into the environment. By requiring that this information be provided, Proposition 65 enables Californians to make informed decisions about their exposures to these chemicals.

Proposition 65 also prohibits California businesses from knowingly discharging significant amounts of listed chemicals into sources of drinking water.

Proposition 65 requires California to publish a list of chemicals known to cause cancer, birth defects or other reproductive harm. This list, which must be updated at least once a year, has grown to include approximately 900 chemicals since it was first published in 1987.

• What types of chemicals are on the Proposition 65 list?

The list contains a wide range of naturally occurring and synthetic chemicals that include additives or ingredients in pesticides, common household products, food, drugs, dyes, or solvents. Listed chemicals may also be used in manufacturing and construction, or they may be byproducts of chemical processes, such as motor vehicle exhaust.

• What does a warning mean?

If a warning is placed on a product label or posted or distributed at a workplace, a business, or in rental housing, the business issuing the warning is aware or believes that it is exposing individuals to one or more listed chemicals.

By law, a warning must be given for listed chemicals unless the exposure is low enough to pose no significant risk of cancer or is significantly below levels observed to cause birth defects or other reproductive harm.

• Where can I get more information on Proposition 65?

If you have specific questions on the administration or implementation of Proposition 65, you can contact OEHHA's Proposition 65 program at P65.Questions@oehha.ca.gov, or by phone at (916) 445-6900.

Assembly Instructions

Caution: You must read this before you proceed

Table

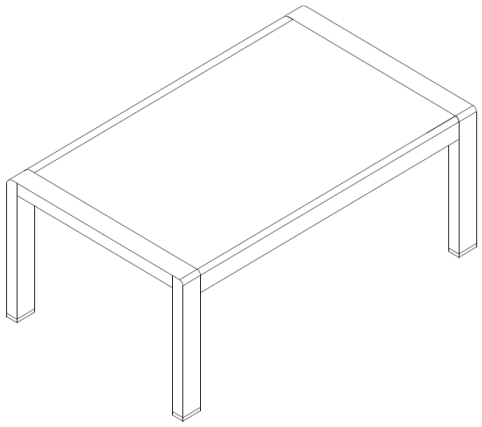

Parts List

Label	Picture	Description	QTY
A		Left Leg	1
B		Right Leg	1
C	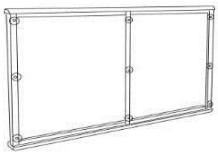	Table Top Frame (with Suction Cups)	1
D		Glass Top	1

Hardware

Label	Picture	Description	QTY
①		Bolt(M6*20MM)	5
②		Bolt(M6*25MM)	5
③	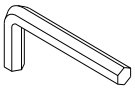	Allen Key	1

Assembly Preparation

Before Beginning Assembly:

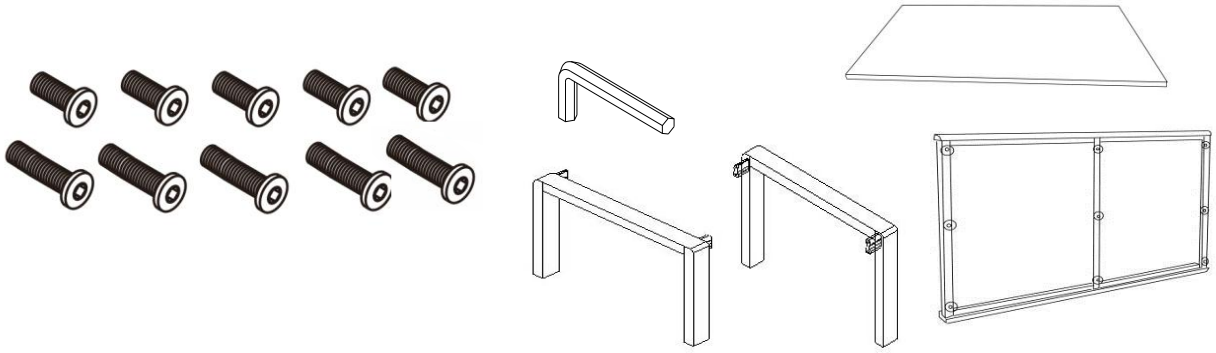

- Read instructions, cover to cover-
- Have 2 adults on hand for assembly-
- Do not assemble on flooring or carpet-
- Assemble on a clean non-marring surface (packing foam)-
- Save all packaging until finished-

Assembly Steps

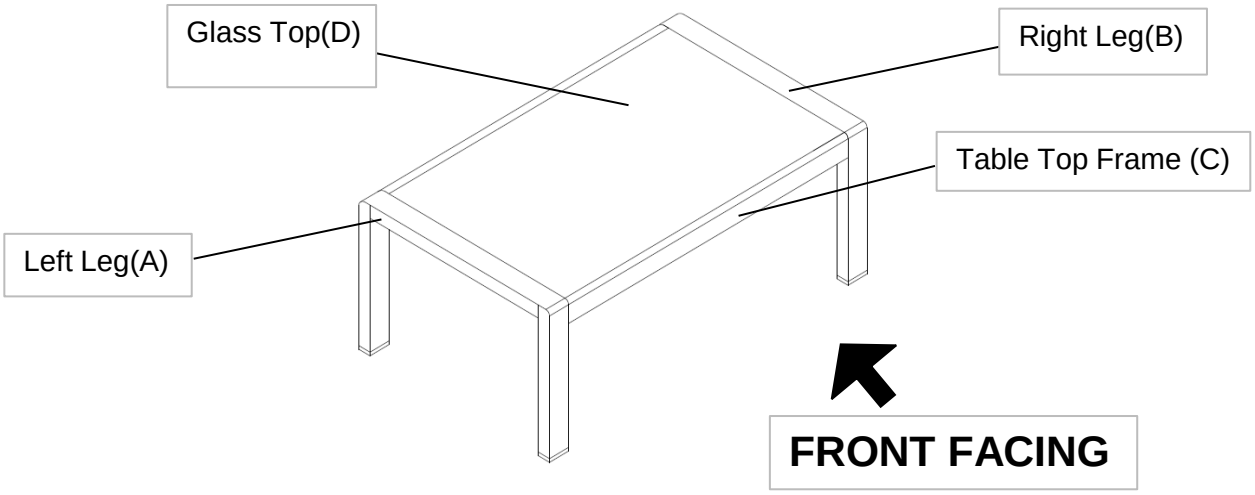

This Table has multiple parts and may require up to some 30 minutes to assemble. To give you an overview of the Table parts, the above picture is to help you put the various parts into perspective. Please read through the instructions below to familiarise yourself with the parts and steps before assembly.

Step 1

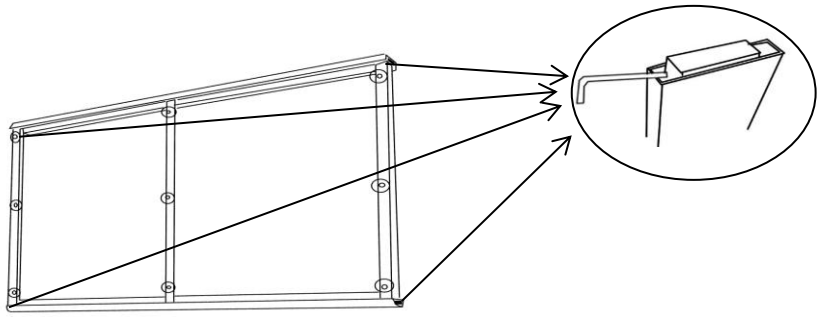

Take out the silders in the four ends of Table Top Frame(C) using Allen Key(③).

Step 2

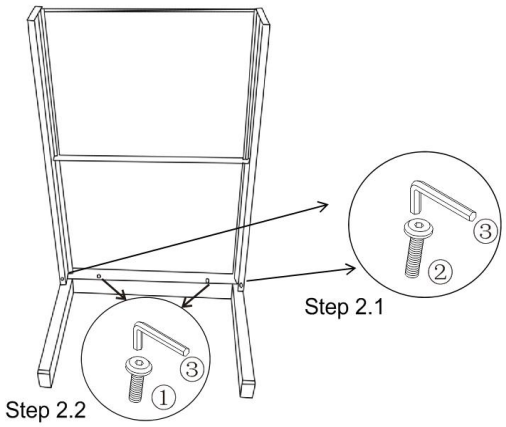

Open the carton and place all the parts on a clean, non-marring surface.

2.1 Attach the Table Top Frame(C) to the Left Leg(A) using Bolt(②) and Allen Key(③) as shown in the picture.

2.2 Attach the Table Top Frame(C) to the Left Leg(A) using Bolt(①) and Allen Key(③) as shown in the picture.

Do not fully tighten the Bolt.

Caution: The Table and its Parts are Heavy. Two adults are required for lifting and moving them.

Step 3

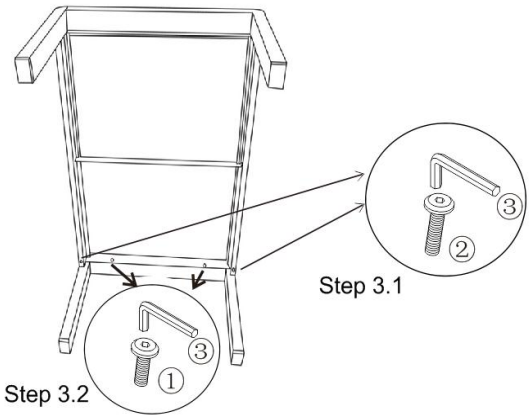

3.1 Attach the Table Top Frame(C) to the Right Leg(B) using Bolt(②) and Allen Key(③) as shown in the picture.

3.2 Attach the Table Top Frame(C) to the Right Leg(B) using Bolt(①) and Allen Key(③) as shown in the picture.

Do not fully tighten the Bolt.

Caution: The Table and its Parts are Heavy. Two adults are required for lifting and moving them.

Step 4

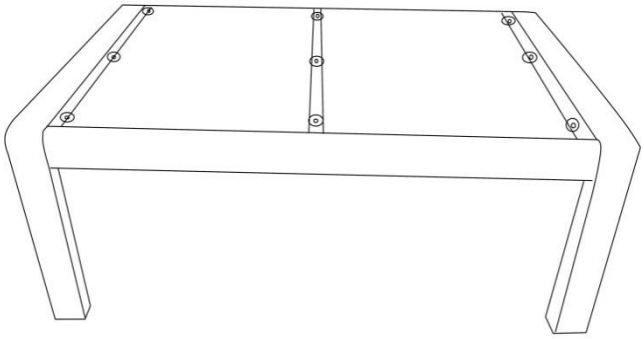

Stand up the table, check stability and then tighten the bolts.
Note DO NOT fully tighten a BOLT in one go and then move on to the next. Rather, In a sequential manner, gradually tighten each Bolt until all bolts are evenly secured. This methodology will ensure maximum evenness once all Bolts are fully tightened.

Step 5

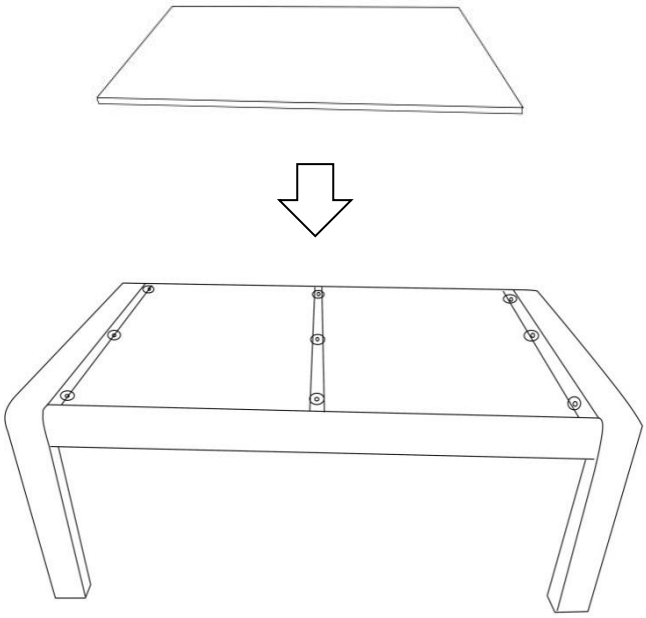

Place the Glass Top(D) on the assembled Table Frame.
Caution: The Table and its Parts are Heavy. Two adults are required for lifting and moving them.

Step 6

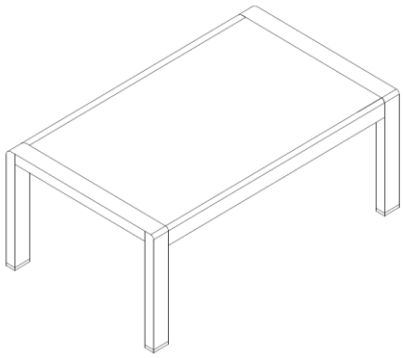

Your Table is ready for use.

Care &Maintenance

- Do not put hot items directly on furniture surface
- Do not clean furniture with harsh cleansers or polish.
- To obtain the longest lifespan of your outdoor prodcts, minimizing exposure to direct sunlight is recommended.
- Children should not climb or jump on the furniture.
- Do not write on furniture without a padded barrier to protect the surface.
- To obtain the longest lifespan of your outdoor products, avoid extended and lengthy exposure to rain, snow, and direct sunshine. Whenever possible cover the product and /or place under patio or awnings.
- Not for commercial use. For residential use only .
- Stains may be removed with mild soap solution and damp cloth.
- Keep away from sources of ignition.

- Dust and pick-up spills using a clean, non-colored, lint-free cloth.